User's Guide
SLOU285–December 2009

TAS5612/14PHD2EVM

This user's guide describes the operation of the evaluation module for the TAS5614PHD or TAS5612PHD Digital Amplifier Power Output Stages using TAS5518 Digital Audio PWM Processor from Texas Instruments. The user's guide also provides measurement data and design information like schematic, BOM, and PCB layout.

Contents

1 Introduction 2
1.1 TAS5612/14PHD2EVM Features 3
1.2 PCB Key Map 4
2 Quick Setup Guide 4
2.1 Electrostatic Discharge Warning 4
2.2 Unpacking the EVM 5
2.3 Power Supply Setup 5
2.4 Speaker Connection 5
2.5 Output Configuration BTL and PBTL 5
2.6 GUI Software Installation 6
3 Protection 7
3.1 Short Circuit Protection and Fault Reporting Circuitry 7
3.2 Fault Reporting 7
4 Related Documentation from Texas Instruments 8
4.1 Additional Documentation 8
Appendix A Design Documents 8

List of Figures

1 Integrated PurePath Digital™ Amplifier System 3
2 Physical Structure for the TAS5612/14PHD2EVM (Approximate Layout) 4
3 PBTL Mode Configuration 6
4 TAS5518 GUI Window 7

List of Tables

1 TAS5612/14PHD2EVM Specification 2
2 Recommended Supply Voltages 5
3 TAS5612/14 Warning/Error Signal Decoding 8
4 Related Documentation from Texas Instruments 8

PurePath, Equibit are trademarks of Texas Instruments.
I²C is a trademark of NXP B.V. Corp Netherlands.

Copyright © 2009, Texas Instruments Incorporated

1 Introduction

The TAS5612/14PHD2EVM PurePath™ Premier Pro customer evaluation module demonstrates the integrated circuits TAS5614PHD or TAS5612PHD and TAS5518PAG from Texas Instruments (TI).

The TAS5614PHD and TAS5612PHD is high-performance, integrated Stereo Feedback Digital Amplifier Power Stages designed to drive 4-Ω speakers at up to 150W per channel for TAS5614PHD and 125W per channel for TAS5612PHD . The devices incorporates the TI Equibit™ technology and is designed to be used with TI's Equibit™ modulators. This system only requires a passive demodulation filter to deliver a efficiency, quality audio amplification.

TAS5518PAG is a high performance 32 bit (24 bit input) multi channel PurePath™ Digital Pulse Width Modulator (PWM) based on Equibit™ technology with fully symmetrical AD modulation scheme. The device also has Digital Audio Processing (DAP) that provides 48 bit signal processing, advanced performance and a high level of system integration. The device has interfaces for headphone output and Power Supply Volume Control (PSVC).

This EVM is configurable to 2 BTL channels for stereo evaluation or 1 PBTL (parallel BTL) channel for subwoofer evaluation.

This EVM, together with a TI input-USB board 2, is a complete stereo digital audio amplifier system which includes digital input (S/PDIF), analog inputs, interface to PC and DAP features like digital volume control, input and output mixers, automute, tone controls, loudness, EQ filters and dynamic range compression (DRC). There are configuration options for power stage failure protection.

Table 1. TAS5612/14PHD2EVM Specification

Key Parameters	Values
TAS5614 Output Stage Supply Voltage	18V - 36V
TAS5612 Output Stage Supply Voltage	16V - 32.5V
Number of Channels	2 x BTL or 1 x PBTL
Load Impedance BTL	4-8 Ohm
Load Impedance PBTL	2-3 Ohm
TAS5614 Output power BTL	150W / 4Ohm / 10%THD+N
TAS5614 Output power PBTL	300 W / 2Ohm / 10%THD+N
TAS5612 Output power BTL	125W / 4Ohm / 10%THD+N
TAS5612 Output power PBTL	250W / 2Ohm / 10%THD+N
Dynamic Range (DNR)	>105 dB
PWM Processor	TAS5518PAG
Output Stage	TAS5614PHD or TAS5612PHD

Copyright © 2009, Texas Instruments Incorporated

This document covers EVM specifications, audio performance and power efficiency measurements graphs, and design documentation that includes schematics, parts list, layout, and mechanical design.

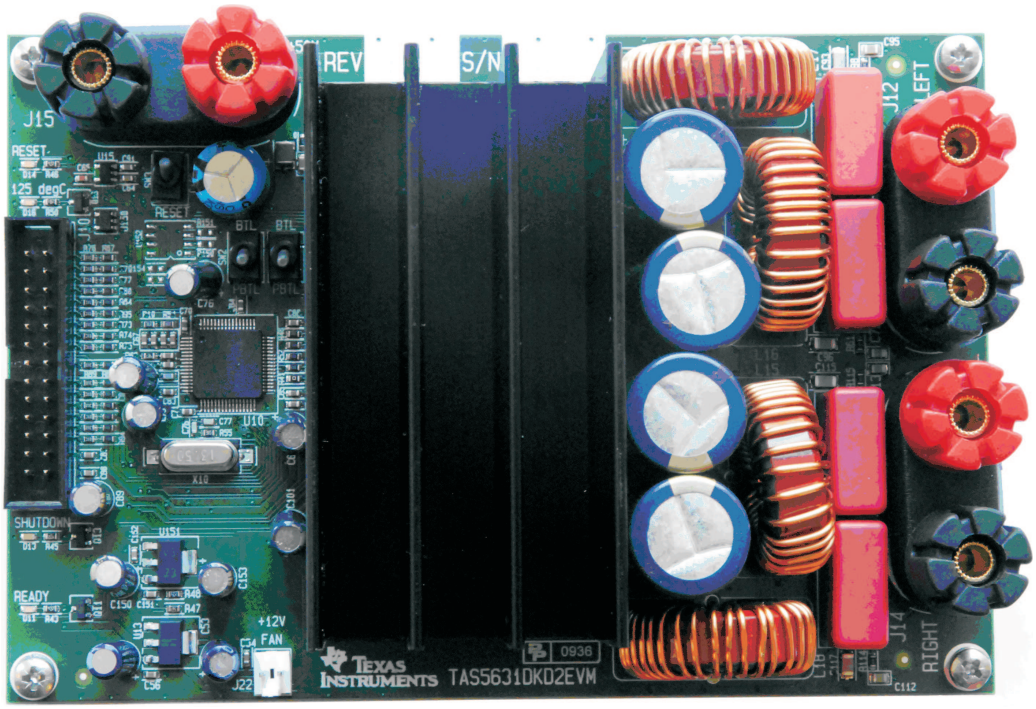

Gerber (layout) files are available at: www.ti.com.

The EVM is delivered with cables and Input-USB board 2 to connect to an input source, and be controlled from a PC.

1.1 TAS5612/14PHD2EVM Features

- Stereo PurePath Digital™ evaluation module.
- Self-contained protection system (short circuit and thermal).
- Standard I^2S and I^2C™ / Control connector for TI input board
- Double-sided plated-through PCB layout.

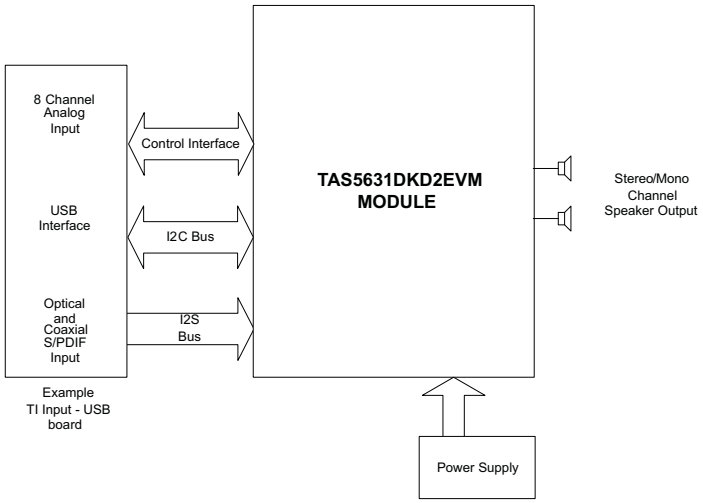

Figure 1. Integrated PurePath Digital™ Amplifier System

Copyright © 2009, Texas Instruments Incorporated

1.2 PCB Key Map

Physical structure for the TAS5612/14PHD2EVM is illustrated in Figure 2.

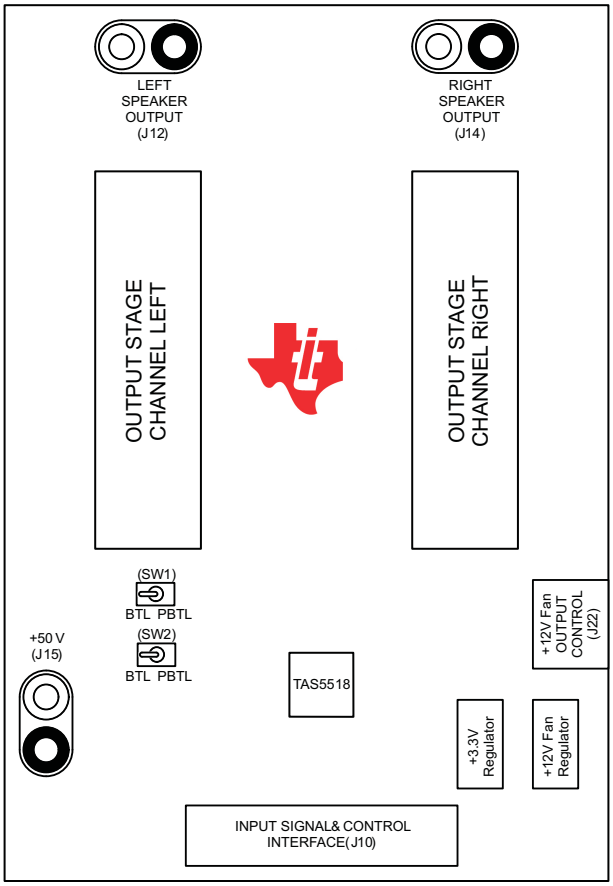

Figure 2. Physical Structure for the TAS5612/14PHD2EVM (Approximate Layout)

2 Quick Setup Guide

This section describes the TAS5612/14PHD2EVM board in regards to power supplies and system interfaces. The section provides information regarding handling and unpacking, absolute operating conditions, and a description of the factory default switch and jumper configuration.

This section also provides a step-by-step guide to configuring the TAS5612/14PHD2EVM for device evaluation.

2.1 Electrostatic Discharge Warning

Many of the components on the TAS5612/14PHD2EVM are susceptible to damage by electrostatic discharge (ESD). Customers are advised to observe proper ESD handling precautions when unpacking and handling the EVM, including the use of a grounded wrist strap at an approved ESD workstation.

CAUTION

Failure to observe ESD handling procedures can result in damage to EVM components.

Copyright © 2009, Texas Instruments Incorporated

2.2 Unpacking the EVM

Upon opening the TAS5612/14PHD2EVM package, check to make sure that the following items are included:

- 1 pc. TAS5612/14PHD2EVM board using one TAS5518PAG and one TAS5614PHD or TAS5612PHD.
- 1 pc. TI Input-USB board 2 for interfacing TAS5612/14PHD2EVM with SPDIF/analog sources and PC for control.
- 1 pc. Signal and Control Interface IDC cable for connection to an I^2S front-end like the attached TI Input-USB board 2.
- 1 pc. Cable for connecting Input-USB board 2 to a USB port on a PC for TAS5518 control by software.
- 1 pc. AC to DC External 15 V Power supply (System supply).
- 4 pcs. AC Input Clips for External 15 V Power Supply (US, Europe, UK and Australia).

If any of these items are missing, contact the nearest Texas Instruments Product Information Center to inquire about a replacement.

Connect the Input-micro board 2 to the TAS5612/14PHD2EVM using the delivered IDC cable.

2.3 Power Supply Setup

To power up the EVM, two power supplies are needed. One for system power, logic and gate-drive, and one for output stage supply. H-bridge Power supply is connected to the EVM using banana cables. System Power Supply is supplied from the enclosed External 15 V wall plug adapter.

Table 2. Recommended Supply Voltages

Description	Voltage Range	Current Requirements	Cable
TAS5614 Output stage power supply	18V – 36V	16 A	J15 (marked PVDD)
TAS5612 Output stage power supply	16V - 32.5V	16 A	J15 (marked PVDD)

CAUTION

Applying voltages above the specifications given in Table 2 can cause permanent damage to the hardware.

NOTE: The length of power supply cable must be minimized. Increasing length of PSU cable is equal to increasing the distortion for the amplifier at high output levels and low frequencies.

2.4 Speaker Connection

CAUTION

Both positive and negative speaker outputs are floating and cannot be connected to ground (e.g. through an oscilloscope).

2.5 Output Configuration BTL and PBTL

When changing mode e.g. from BTL to PBTL, make sure that RESET switch SW3 is activated before changing the state of mode switches SW1 and SW2. Switch SW1 and SW2 has to be synchronized in state BTL or PBTL.

In PBTL mode the load has to be connected according to Figure 3:

Copyright © 2009, Texas Instruments Incorporated

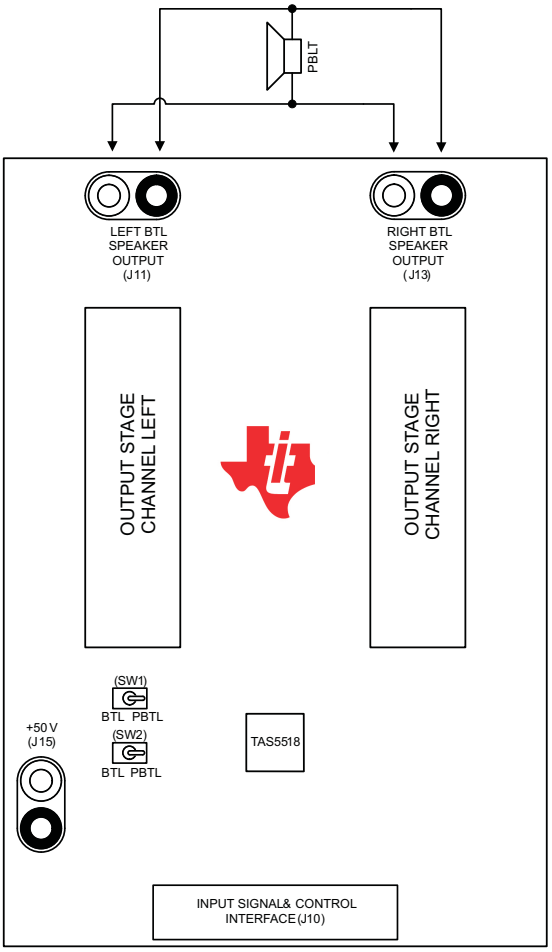

Figure 3. PBTL Mode Configuration

2.6 GUI Software Installation

The TAS5518 GUI provides control of all registers in the TAS5518. To install the GUI, download the GUI setup file and the configuration file "TAS5612/14PHD2EVM Configuration (1.00).cfg" from the TAS5612/14PHD2EVM folder on www.ti.com.

After installation turn on power supplies and connect the USB cable to the Input-USB board 2.

Start the GUI program from windows menu. Start up of the GUI will take a few seconds.

Copyright © 2009, Texas Instruments Incorporated

Figure 4. TAS5518 GUI Window

From the files menu load the configuration file:

- TAS5612/14PHD2EVM Configuration (1.00).cfg

The file is located in the EVM folder on the TI website. This file contains all settings for a default setup of the EVM.

For easy access to the file, it is recommended that the user copy the files into the directory where the GUI is installed. The default is C:\Program Files\Texas Instruments Inc\TAS5518\

For more advanced use of the GUI, see the GUI User's Guide and data manual for TAS5518.

3 Protection

This section describes the short-circuit protection and fault reporting circuitry of the TAS5614 and TAS5612 devices.

3.1 Short Circuit Protection and Fault Reporting Circuitry

The TAS5612 and TAS5614 is self-protecting devices that provides fault reporting (including high-temperature protection and short circuit protection). TAS5612 and TAS5614 is configured in back-end auto-recovery mode, and resets automatically after all errors (M1, M2 and M3 is set low), see the data sheets (TAS5612 (SLAS682) or TAS5614 (SLAS680)) for further explanation. The device will re-start itself after an error occasion, and report through the $\overline{SD}$ error signal.

3.2 Fault Reporting

The $\overline{OTW}$ and $\overline{SD}$ outputs from TAS5612/14 indicate fault conditions. see the TAS5612/14 data sheet for a description of these pins.

Copyright © 2009, Texas Instruments Incorporated

Table 3. TAS5612/14 Warning/Error Signal Decoding

$\overline{SD}$	$\overline{OTW1}$	$\overline{OTW2}$	Device Condition
0	0	0	High temperature error and/or high current error
0	0	1	Under voltage lockout or high current error. 100°C temperature warning
0	1	1	Under voltage lockout or high current error
1	0	0	125°C temperature warning
1	0	1	100°C temperature warning
1	1	1	Normal operation, no errors/warnings

The shutdown signals together with the temperature warning signal, give the chip state information as described in Table 3. Device fault reporting outputs are open-drain outputs.

4 Related Documentation from Texas Instruments

The following table contains a list of data manuals that have detailed descriptions of the integrated circuits used in the design of the TAS5612/14PHD2EVM. The data manuals can be obtained at the URL http://www.ti.com.

Table 4. Related Documentation from Texas Instruments

Part Number	Literature Number
TAS5518	SLES115
TAS5612	SLAS682
TAS5614	SLAS680
TLV271	SLOS351
TPS3825-33	SLVS165
TLV1117-33C	SLVS561

4.1 Additional Documentation

1. *PC Configuration Tool for TAS5518* (TAS5518 GUI ver. 4.0 or later)
2. *System Design Considerations for True Digital Audio Power Amplifiers* (SLAA117)
3. *Digital Audio Measurements* (SLAA114)
4. *PSRR for PurePath Digital Audio Amplifiers* (SLEA049)
5. *Power Rating in Audio Amplifier* (SLEA047)
6. *PurePath Digital AM Interference Avoidance* (SLEA040)
7. *Click & Pop Measurements Technique* (SLEA044)
8. *Power Supply Recommendations for DVD-Receivers* (SLEA027)
9. *Implementation of Power Supply Volume Control* (SLEA038)

Appendix A Design Documents

This appendix comprises design documents pertaining to the TAS5612/14PHD2EVM evaluation module. The documents are presented in the following order.

- Schematic (5 pages)
- Parts List (2 pages)
- PCB Specification (1 page)
- PCB Layers (8 pages)
- Heat sink drawing (1 page)
- Inductor (1 page)

Copyright © 2009, Texas Instruments Incorporated

Evaluation Board/Kit Important Notice

Texas Instruments (TI) provides the enclosed product(s) under the following conditions:

This evaluation board/kit is intended for use for **ENGINEERING DEVELOPMENT, DEMONSTRATION, OR EVALUATION PURPOSES ONLY** and is not considered by TI to be a finished end-product fit for general consumer use. Persons handling the product(s) must have electronics training and observe good engineering practice standards. As such, the goods being provided are not intended to be complete in terms of required design-, marketing-, and/or manufacturing-related protective considerations, including product safety and environmental measures typically found in end products that incorporate such semiconductor components or circuit boards. This evaluation board/kit does not fall within the scope of the European Union directives regarding electromagnetic compatibility, restricted substances (RoHS), recycling (WEEE), FCC, CE or UL, and therefore may not meet the technical requirements of these directives or other related directives.

Should this evaluation board/kit not meet the specifications indicated in the User's Guide, the board/kit may be returned within 30 days from the date of delivery for a full refund. THE FOREGOING WARRANTY IS THE EXCLUSIVE WARRANTY MADE BY SELLER TO BUYER AND IS IN LIEU OF ALL OTHER WARRANTIES, EXPRESSED, IMPLIED, OR STATUTORY, INCLUDING ANY WARRANTY OF MERCHANTABILITY OR FITNESS FOR ANY PARTICULAR PURPOSE.

The user assumes all responsibility and liability for proper and safe handling of the goods. Further, the user indemnifies TI from all claims arising from the handling or use of the goods. Due to the open construction of the product, it is the user's responsibility to take any and all appropriate precautions with regard to electrostatic discharge.

EXCEPT TO THE EXTENT OF THE INDEMNITY SET FORTH ABOVE, NEITHER PARTY SHALL BE LIABLE TO THE OTHER FOR ANY INDIRECT, SPECIAL, INCIDENTAL, OR CONSEQUENTIAL DAMAGES.

TI currently deals with a variety of customers for products, and therefore our arrangement with the user **is not exclusive.**

TI assumes **no liability for applications assistance, customer product design, software performance, or infringement of patents or services described herein.**

Please read the User's Guide and, specifically, the Warnings and Restrictions notice in the User's Guide prior to handling the product. This notice contains important safety information about temperatures and voltages. For additional information on TI's environmental and/or safety programs, please contact the TI application engineer or visit www.ti.com/esh.

No license is granted under any patent right or other intellectual property right of TI covering or relating to any machine, process, or combination in which such TI products or services might be or are used.

FCC Warning

This evaluation board/kit is intended for use for **ENGINEERING DEVELOPMENT, DEMONSTRATION, OR EVALUATION PURPOSES ONLY** and is not considered by TI to be a finished end-product fit for general consumer use. It generates, uses, and can radiate radio frequency energy and has not been tested for compliance with the limits of computing devices pursuant to part 15 of FCC rules, which are designed to provide reasonable protection against radio frequency interference. Operation of this equipment in other environments may cause interference with radio communications, in which case the user at his own expense will be required to take whatever measures may be required to correct this interference.

EVM Warnings and Restrictions

It is important to operate this EVM within the input voltage range of 0 V to 32.5 V for the TAS5612; 0 V to 36 V for the TAS5614. and the output voltage range of 0 V to 32.5 V for the TAS5612; 0 V to 36 V for the TAS5614.

Exceeding the specified input range may cause unexpected operation and/or irreversible damage to the EVM. If there are questions concerning the input range, please contact a TI field representative prior to connecting the input power.

Applying loads outside of the specified output range may result in unintended operation and/or possible permanent damage to the EVM. Please consult the EVM User's Guide prior to connecting any load to the EVM output. If there is uncertainty as to the load specification, please contact a TI field representative.

During normal operation, some circuit components may have case temperatures greater than 90°C. The EVM is designed to operate properly with certain components above 125°C as long as the input and output ranges are maintained. These components include but are not limited to linear regulators, switching transistors, pass transistors, and current sense resistors. These types of devices can be identified using the EVM schematic located in the EVM User's Guide. When placing measurement probes near these devices during operation, please be aware that these devices may be very warm to the touch.

Mailing Address: Texas Instruments, Post Office Box 655303, Dallas, Texas 75265
Copyright © 2009, Texas Instruments Incorporated

Design Name:	**TAS5612/14PHD2EVM**
Type:	Mass Market EVM
File Name:	A859-SCH-001.DSN
Version:	1.00
Date:	27.Oct.2009
Design Engineer:	Jonas L. Holm
Audio Configuration:	PurePath Premire Pro Digital Amplifier Design 1 x TAS5612/14PHD, 1 x TAS5518C
Interfaces:	J10: 26 pin IDC Header for I2S Audio, Control, I2C, +5V and +12V J12, J14: Banana binding posts for speaker connection. J15: Banana binding post for H-Bridge Supply J22: 2 pins 2.54 mm Header for Supply & control of optional external Fan
Setup:	4-8 Ohm (BTL) Speaker Loads TAS5612: +32.5 V H-Bridge Supply Voltage TAS5614: +36.0 V H-Bridge Supply Voltage
Performance:	TAS5612: 2 x 125 W / 4 Ohm (BTL) 10% THD+N TAS5614: 2 x 150 W / 4 Ohm (BTL) 10% THD+N > 104 dB Dynamic Range

Page

1/5: Front Page and Schematic Disclaimer
2/5: Frontend overview
3/5: TAS5612/14 Amplifier
4/5: Power Supply
5/5: Mechanics

NOTE1

SCHEMATIC DISCLAIMER

The schematic information and materials ("Materials") provided here are provided by Texas Instruments Incorporated ("TI") as a service to its customers and/or suppliers, and may be used for informational purposes only, and only subject to the following terms. By downloading or viewing these Materials, you are signifying your assent to these terms.

1.) These evaluation schematics are intended for use for ENGINEERING DEVELOPMENT AND EVALUATION PURPOSES ONLY and are not considered by Texas Instruments to be fit as a basis for establishing production products or systems. This information may be incomplete in several respects, including but not limited to information relating to required design, marketing, and/or manufacturing-related protective considerations and product safety measures typically found in the end-product incorporating the goods.

2.) Accordingly, neither TI nor its suppliers warrant the accuracy or completeness of the information, text, graphics, links or other items contained within the Materials. TI may make changes to the Materials, or to the products described therein, at any time without notice. TI makes no commitment to update the Materials.

3.) TI assumes no liability for applications assistance, customer product design, software performance, or services that may be described or referenced in the Materials. The user assumes all responsibility and liability for proper and safe design and handling of goods. Accordingly, the user indemnifies TI from all claims arising from its use of the Materials.

4.) TI currently deals with various customers for products, and therefore our arrangement with the user will not be exclusive. TI makes no representations regarding the commercial availability of non-TI components that may be referenced in the Materials.

5.) No license is granted under any patent right or other intellectual property right of TI covering or relating to any combination, machine, or process in which such TI products or services might be or are used. Except as expressly provided herein, TI and its suppliers do not grant any express or implied right to you under any patents, copyrights, trademarks, or trade secret information.

6.) Performance tests and ratings, to the extent referenced in the Materials, are measured using specific computer systems and/or components and reflect the approximate performance of TI products as measured by those tests. Any difference in system hardware or software design or configuration may affect actual performance. Buyers should consult other sources of information to evaluate the performance of systems or components they are considering purchasing.

7.) Resale of TI's products or services with statements different from or beyond the parameters stated by TI for that product or service in official TI data books or data sheets voids all express and any implied warranties for the associated TI product or service, and is an unfair and deceptive business practice, and TI is not responsible for any such use.

8.) The Materials are copyrighted and any unauthorized use may violate copyright, trademark, and other laws. You may only download one copy for your internal use only, unless you are specifically licensed to do otherwise by TI in writing. This is a license, not a transfer of title, and is subject to the following restrictions: You may not: (a) modify the Materials (including any associated warranties, conditions, limitations or notices) or use them for any commercial purpose, or any public display, performance, sale or rental; (b) decompile, reverse engineer, or disassemble software Materials except and only to the extent permitted by applicable law; (c) remove any copyright or other proprietary notices from the Materials; (d) transfer the Materials to another person. You agree to prevent any unauthorized copying of the Materials. TI may terminate this license at any time if you are in breach of the terms of this Agreement. Upon termination, you will immediately destroy the Materials.

9.) THE MATERIALS ARE PROVIDED "AS IS" WITHOUT ANY EXPRESS OR IMPLIED WARRANTY OF ANY KIND INCLUDING WARRANTIES OF MERCHANTABILITY, NONINFRINGEMENT OF INTELLECTUAL PROPERTY, OR FITNESS FOR ANY PARTICULAR PURPOSE. IN NO EVENT SHALL TI OR ITS SUPPLIERS BE LIABLE FOR ANY DAMAGES WHATSOEVER (INCLUDING, WITHOUT LIMITATION, DAMAGES FOR LOSS OF PROFITS, BUSINESS INTERRUPTION, LOSS OF INFORMATION) ARISING OUT OF THE USE OF OR INABILITY TO USE THE MATERIALS, EVEN IF TI HAS BEEN ADVISED OF THE POSSIBILITY OF SUCH DAMAGES.

Not Used

/ TAS5614 Parts list 1.00

Texas Instruments	AUDIO/IMAGING GROUP Home Audio Amplifiers ALL RIGHTS RESERVED TEXAS INSTRUMENTS INCORPORATED
Project: TAS5612/14PHD2EVM	Rev: 1.00
Page Title: Disclaimer	Size: A3
File Name: A859-SCH-001.DSN	Engineer: Jonas L. Holm
Date: Thursday, October 29, 2009	Page: 1 of 5

Copyright 2009 Texas Instruments, Inc - All rights reserved - The TI and PurePath Digital logos are trademarks of Texas Instruments.

TAS5631PHD2EVM

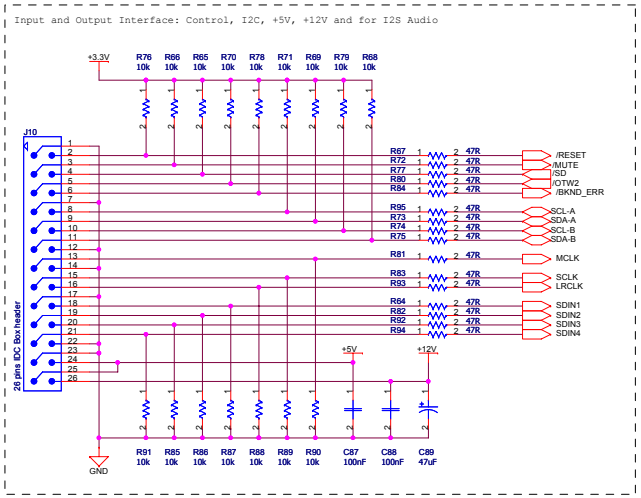

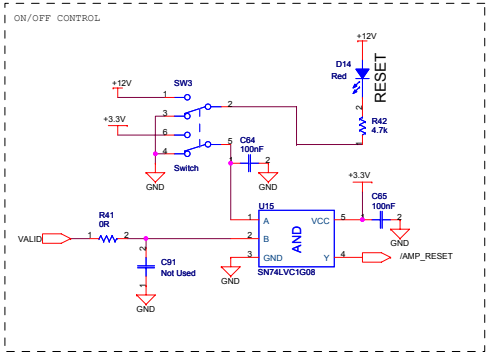

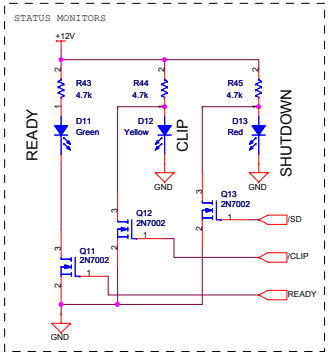

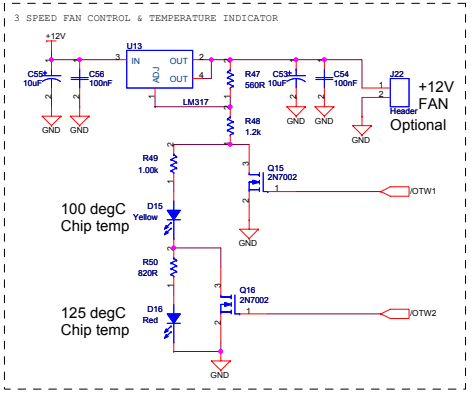

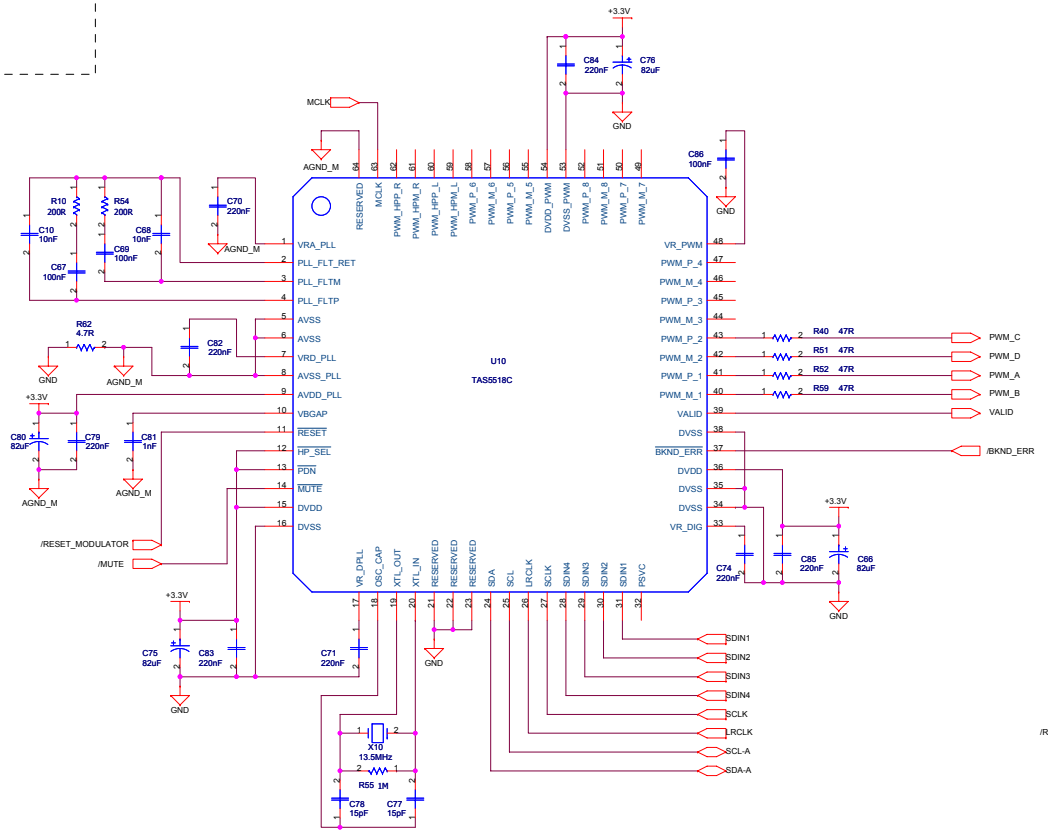

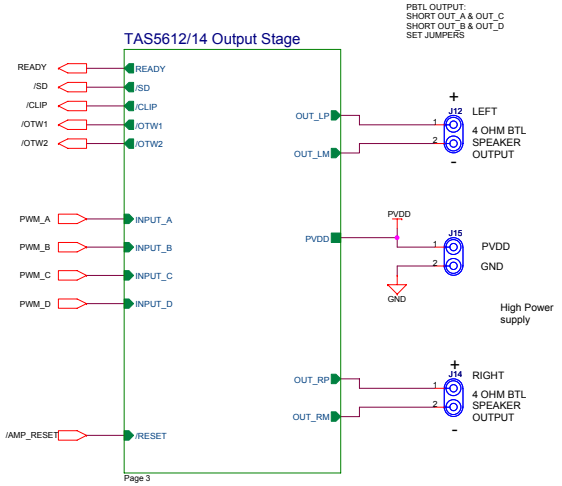

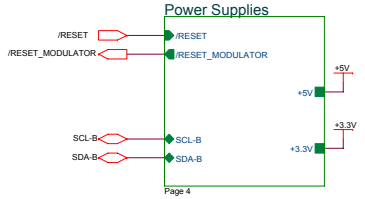

TAS5614 Parts list 1.00

TEXAS INSTRUMENTS	AUDIO/IMAGING GROUP Home Audio Amplifiers ALL RIGHTS RESERVED TEXAS INSTRUMENTS INCORPORATED
Project: TAS5612/14PHD2EVM	Rev: 1.00
Page Title: Input Stage	Size: A2
File Name: ABSP-SCH-001.DSN	Engineer: Jonas L. Holm
Date: Thursday, October 29, 2009	Page: 2 of 5

C28, C30, C97 and C98: It is important to choose either a 1206 or 1210 footprint for these decoupling capacitors to have the posibility to take the audio output trace directly under the capacitor in layout!

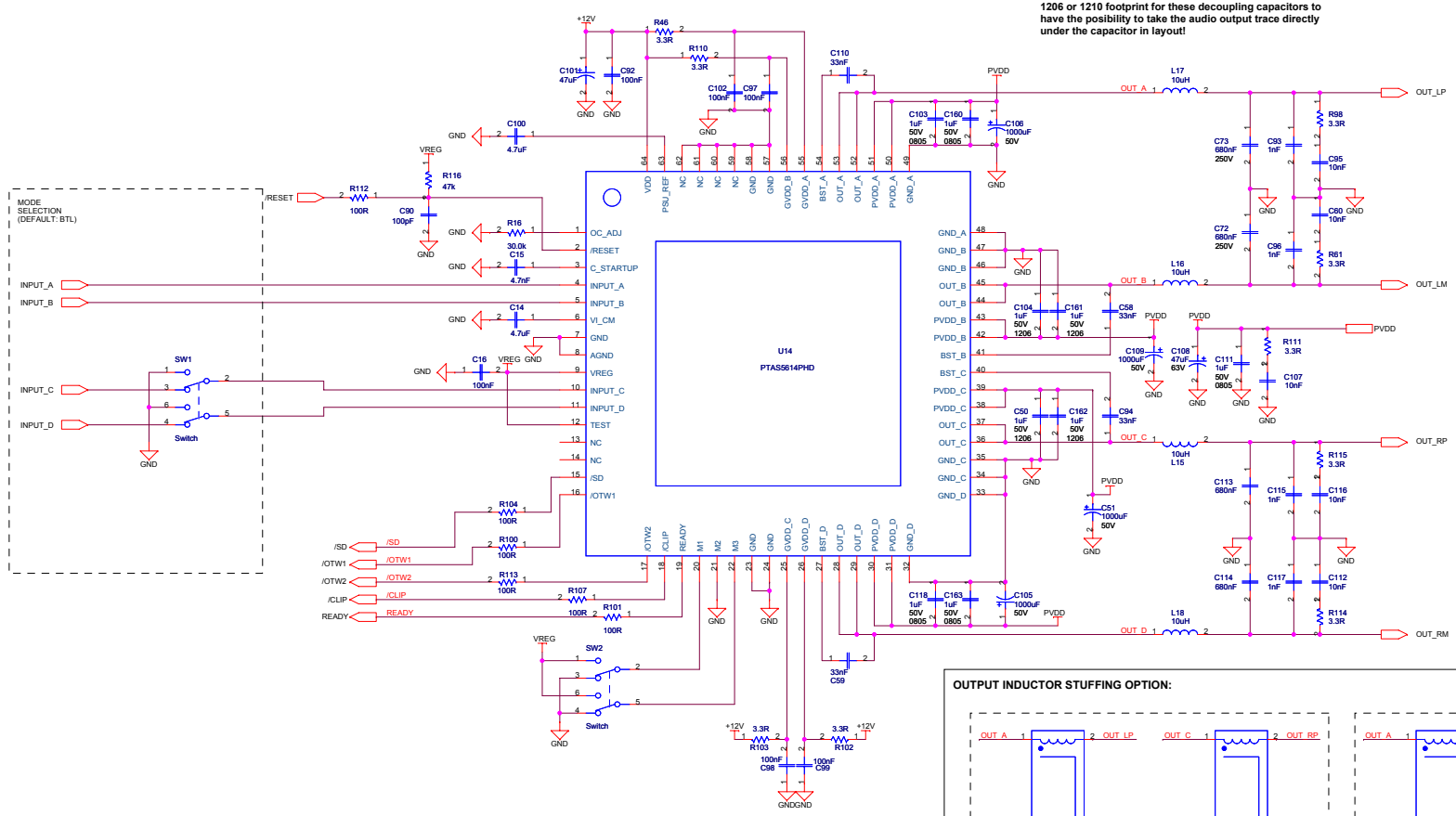

OUTPUT INDUCTOR STUFFING OPTION:

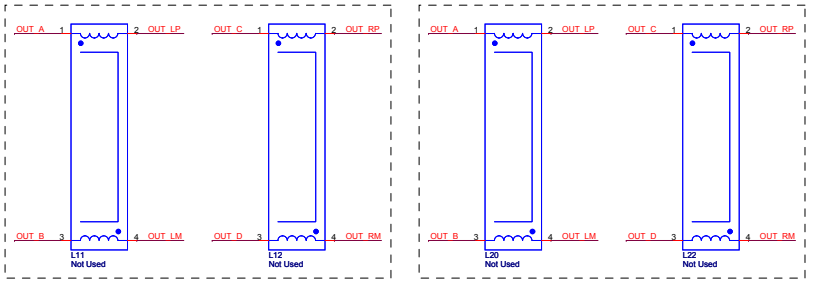

3 OHM LOAD OPERATION:

1) Mount Schottky diodes (D24, D25, D26 and D27)
2) Change ROC = 22kOhm (R12)

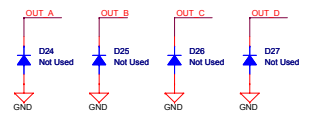

/Output Stage TAS5614 Parts list 1.00

TEXAS INSTRUMENTS	AUDIO/IMAGING GROUP Home Audio Amplifiers ALL RIGHTS RESERVED TEXAS INSTRUMENTS INCORPORATED
Project: TAS5612/14PHD2EVM	Rev: 1.00
Page Title: Main Schematic	Size: A2
File Name: A859-SCH-001.DSN	Engineer: Jonas L. Holm
Date: Thursday, October 29, 2009	Page: 3 of 5

POWER SUPPLIES

+3.3 V POWER SUPPLY

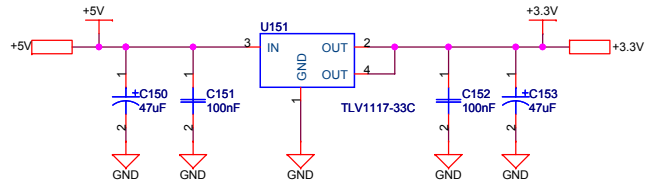

POWER ON RESET

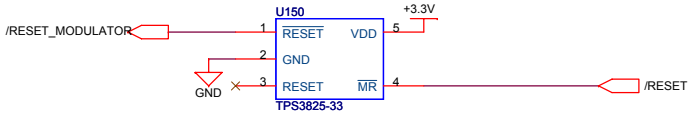

EEPROM FOR INPUT MICRO BOARD

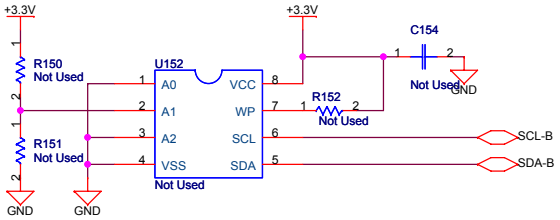

/Power Supplies

TAS5614 Parts list 1.0(

TEXAS INSTRUMENTS

AUDIO/IMAGING GROUP
Home Audio Amplifiers
ALL RIGHTS RESERVED
TEXAS INSTRUMENTS INCORPORATED

Project: TAS5612/14PHD2EVM	Rev: 1.00
Page Title: Power Supplies	Size: A3
File Name: A859-SCH-001.DSN	Engineer: Jonas L. Holm
Date: Thursday, October 29, 2009	Page: 4 of 5

MECHANICS

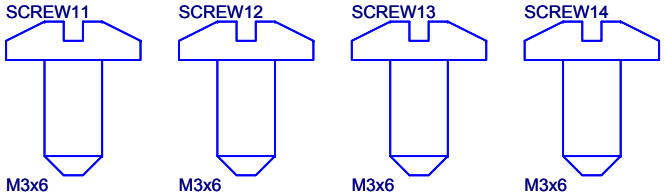

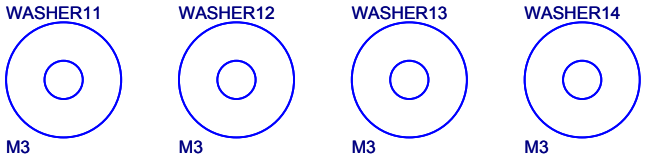

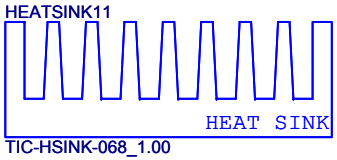

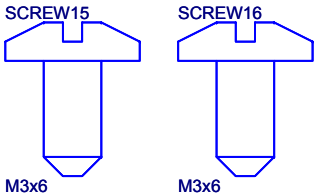

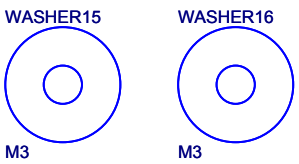

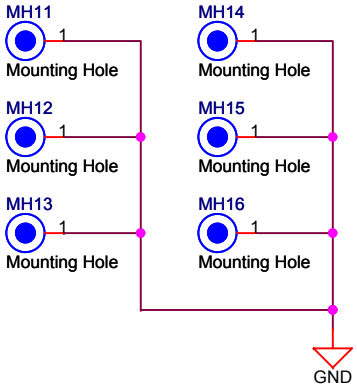

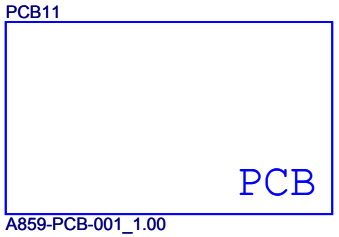

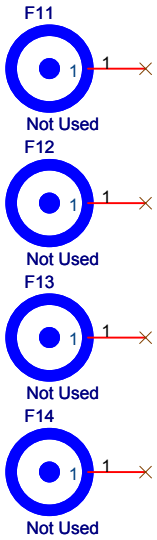

TAS5614 Parts list

TEXAS INSTRUMENTS	AUDIO/IMAGING GROUP Home Audio Amplifiers ALL RIGHTS RESERVED TEXAS INSTRUMENTS INCORPORATED
Project: TAS5612/14PHD2EVM	Rev: 1.00
Page Title: Mechanics	Size: A4
File Name: A859-SCH-001.DSN	Engineer: Jonas L. Holm
Date: Thursday, October 29, 2009	Page: 5 of 5

TAS5612_14PHD2EVM Parts List (1.00).xls

Qty	Part Reference	Description	Manufacture	First Mfr P/N
1	R41	0R / 5% / 0603 Thick Film Resistor	Yageo	RC0603JR-070RL
6	R100 R101 R104 R107 R112 R113	100R / 100mW / 5% / 0603 Thick Film Resistor	Yageo	RC0603JR-07100RL
1	R49	1.00k / 100mW / 1% / 0603 Thick Film Resistor	Yageo	RC0603FR-071KL
16	R65 R66 R68 R69 R70 R71 R76 R78	10k / 100mW / 5% / 0603 Thick Film Resistor	Yageo	RC0603JR-0710KL
1	R55	1M / 100mW / 5% / 0603 Thick Film Resistor	Yageo	RC0603JR-071ML
1	R48	1.2k / 100mW / 5% / 0603 Thick Film Resistor	Yageo	RC0603JR-071K2L
2	R10 R54	200R / 100mW / 5% / 0603 Thick Film Resistor	Yageo	RC0603JR-07200RL
1	R16	30.0k / 100mW / 1% / 0603 Thick Film Resistor	Yageo	RC0603FR-0730KL
9	R114 R115	3.3R / 100mW / 5% / 0603 Thick Film Resistor	Yageo	RC0603JR-073R3L
4	R42 R43 R44 R45	4.7k / 100mW / 5% / 0603 Thick Film Resistor	Yageo	RC0603JR-074K7L
1	R116	47k / 100mW / 5% / 0603 Thick Film Resistor	Yageo	RC0603JR-0747KL
1	R62	4.7R / 100mW / 5% / 0603 Thick Film Resistor	Yageo	RC0603JR-074R7L
20	R74 R75 R77 R80 R81 R82 R83 R84	47R / 100mW / 5% / 0603 Thick Film Resistor	Yageo	RC0603JR-0747RL
1	R47	560R / 100mW / 5% / 0603 Thick Film Resistor	Yageo	RC0603JR-07560RL
1	R50	820R / 100mW / 5% / 0603 Thick Film Resistor	Yageo	RC0603JR-07820RL
5	C60 C95 C107 C112 C116	Ceramic 10nF / 100V / 20% X7R 0805 Capacitor	BC Components	0805B103M101NT
5	C103 C111 C118 C160 C163	Ceramic 1uF / 50V / 10% X7R 0805 Capacitor	Murata	GRM21BR71H105KA12L
1	C15	Ceramic 4.7nF / 50V / 10% X7R 0805 Capacitor	BC Components	0805B472K500NT
4	C93 C96 C115 C117	Ceramic 1nF / 100V / 10% NP0 1206 Capacitor	BC Components	1206N102K101NT
4	C50 C104 C161 C162	Ceramic 1uF / 50V / 10% X7R 1206 Capacitor	TDK	C3216X7R1H105K
2	C10 C68	Ceramic 10nF / 50V / 20% X7R 0603 Capacitor	Vishay	VJ0603Y103MXA
17	C16 C54 C56 C64 C65 C67 C69 C86 C87 C88 C92 C97 C98 C99 C102 C151 C152	Ceramic 100nF / 16V / 20% X7R 0603 Capacitor	Vishay	VJ0603Y104MXJ
8	C70 C71 C74 C79 C82 C83 C84 C85	Ceramic 220nF / 16V / 20% X7R 0603 Capacitor	BC Components	VJ0603Y224MXJ
4	C58 C59 C94 C110	Ceramic 33nF / 25V / 20% X7R 0603 Capacitor	BC Components	0603B333M250NT
2	C14 C100	Ceramic 4.7uF / 6.3V / 20% X5R 0603 Capacitor	Panasonic	ECJ-1V50J475M
1	C90	Ceramic 100pF / 50V / 10% NP0 0603 Capacitor	BC Components	0603N101K500NT
1	C81	Ceramic 1nF / 50V / 10% NP0 0603 Capacitor	BC Components	0603N102K500NT
2	C77 C78	Ceramic 15pF / 50V / 10% NP0 0603 Capacitor	BC Components	0603N150K500NT
4	C72 C73 C113 C114	Metal Film 680nF / 250V / 20% Polypropylene 15mm (W:8mm L:18mm) Capacitor	Wima	MKP 4 0.68uF/20%/250Vdc PCM15
2	C53 C55	Electrolytic 10uF / 16V / 20% Aluminium 2mm ø5mm M Series - General Purpose Capacitor	Panasonic	ECA1CM100
4	C51 C105 C106 C109	Electrolytic 1000uF / 50V / 20% Aluminium 7.5mm ø16mm FC Series - Low Impedance Capacitor	Panasonic	EEUFC1H102
1	C108	Electrolytic 47uF / 63V / 20% Aluminium 5mm ø10mm Capacitor	BC Components	2222 136 68479
4	C89 C101 C150 C153	Electrolytic 47uF / 16V / 20% Aluminium 2mm ø5mm FC Series - Low Impedance Capacitor	Panasonic	EEUFC1C470
4	C66 C75 C76 C80	Electrolytic 82uF / 16V / 20% Aluminium 2mm ø5mm FC Series - Low Impedance Capacitor	Panasonic	EEUFC1C820
4	L15 L16 L17 L18	10uH / Ferrite Inductor	Toko	C3B-A0336
3	D13 D14 D16	Light Emitting Red Red LED (0603)	Toshiba	TLSU1008
1	D11	Light Emitting Green Green LED (0603)	Toshiba	TLGU1008
2	D12 D15	Light Emitting Yellow Yellow LED (0603)	Toshiba	TLYU1008
5	Q11 Q12 Q13 Q15 Q16	0.115A / 60V N-ch Power 2N7002 Mosfet (SOT-23)	Fairchild	2N7002
1	U10	TAS5518C / 8 ch PWM processor (AD, DAP,	Texas Instruments	TAS5518CPAG
1	U14	TAS5612PHD or TAS5614PHD/ 150 W STEREO FEEDBACK DIGITAL AMPLIFIER (PHD64)	Texas Instruments	TAS5612PHD or TAS5614PHD
1	U15	SN74LVC1G08 / Single AND gate, LVC (SOT23-5)	Texas Instruments	SN74LVC1G08DBVR
1	U150	TPS3825-33 / 3.3V Supply Voltage Supervisor (SOP5-DBV)	Texas Instruments	TPS3825-33DBVT
1	U13	LM317 / 0.5A Positive Adjustable Regulator (DCY)	Texas Instruments	LM317MDCY
1	U151	TLV1117-33C / 3.3V/800mA Positive Voltage Regulator (SOT4-DCY)	Texas Instruments	TLV1117-33CDCYR

6	SCREW11 SCREW12 SCREW13 SCREW14 SCREW15 SCREW16	M3x6 Pan Head, Pozidriv, A2 Screw	Bossard	BN 81882 M3x6
6	WASHER11 WASHER12 WASHER13 WASHER14 WASHER15 WASHER16	M3 Stainless Steel Spring Washer	Bossard	BN 760 M3
4	STANDOFF11 STANDOFF12 STANDOFF13 STANDOFF14	M3x16 nickel plated brass Stand-off	Bossard	BN 3320 M3x16
1	J22	2 pins / 1 row / 2.54mm Pitch Vertical Male Friction lock Pin header Header	Molex	22-27-2021
1	J10	26 pins / 2 rows / 2.54mm Pitch Vertical Male Low profile IDC 26 pins IDC Box header	Molex	87834-2611
3	J12 J14 J15	2 pins / Vertical Female Banana Red and black banana socket	Cliff	TPP-3CT
1	X10	13.5MHz 13.5MHz SMD Crystal (HCM49)	Citizen	HCM49-13.500MABJT
3	SW1 SW2 SW3	Switch DPDT PCB Mount Switch	NKK-Nikkai	G-22-AP
1	PCB11	A859-PCB-001_1.00 / TAS5614PHD2EVM2 Printed Circuit Board (ver. 1.00)	Elcon	A859-PCB-001(1.00)
1	HEATSINK11	TIC-HSINK-068_1.00 / Heatsink for 1 PHD package, length 78 mm	Phonotech	TIC-HSINK-068(1.00)

Jonas Holm

TAS5614PHD2EVM
PCB SPECIFICATION
Version 1.00

BOARD IDENTIFICATION:	A859-PCB-001(1.00)
BOARD TYPE:	DOUBLE-SIDED PLATED-THROUGH BOARD
LAMINATE TYPE:	FR4
LAMINATE THICKNESS:	1.6mm
TOP LAYER COPPER THICKNESS:	70µm (INCL. PLATING EXTERIOR LAYER)
BOTTOM LAYER COPPER THICKNESS:	70µm (INCL. PLATING EXTERIOR LAYER)
COPPER PLATING OF HOLES:	>25µm
MINIMUM HOLE DIAMETER	0.3 mm
SILKSCREEN COMPONENT SIDE:	WHITE - REMOVE SILKSCREEN FROM SOLDER AREA & PRE-TINNED AREAS
SILKSCREEN SOLDER SIDE:	None
SOLDER MASK COMPONENT SIDE:	GREEN
SOLDER MASK SOLDER SIDE:	GREEN
PROTECTIVE COATING:	SOLDER COATING AND CHEMICAL SILVER ON FREE COPPER
ELECTRICAL TEST:	PCB MUST BE ELECTRICAL TESTED
MANUFACTURED TO:	PERFAG 2E (www.perfag.dk)
APERTURE TABLE:	PERFAG 10A (www.perfag.dk)
BOARD SIZE:	95 x 142 mm
Aprox. Number of holes	468
COMMENTS:	SEE DRILL INFORMATION FILE (A859-PCB-001(1.00).pdf)

COMPONENT SIDE	DpS 5399 091029
TI Denmark A859-PCB-001 (1.00)	

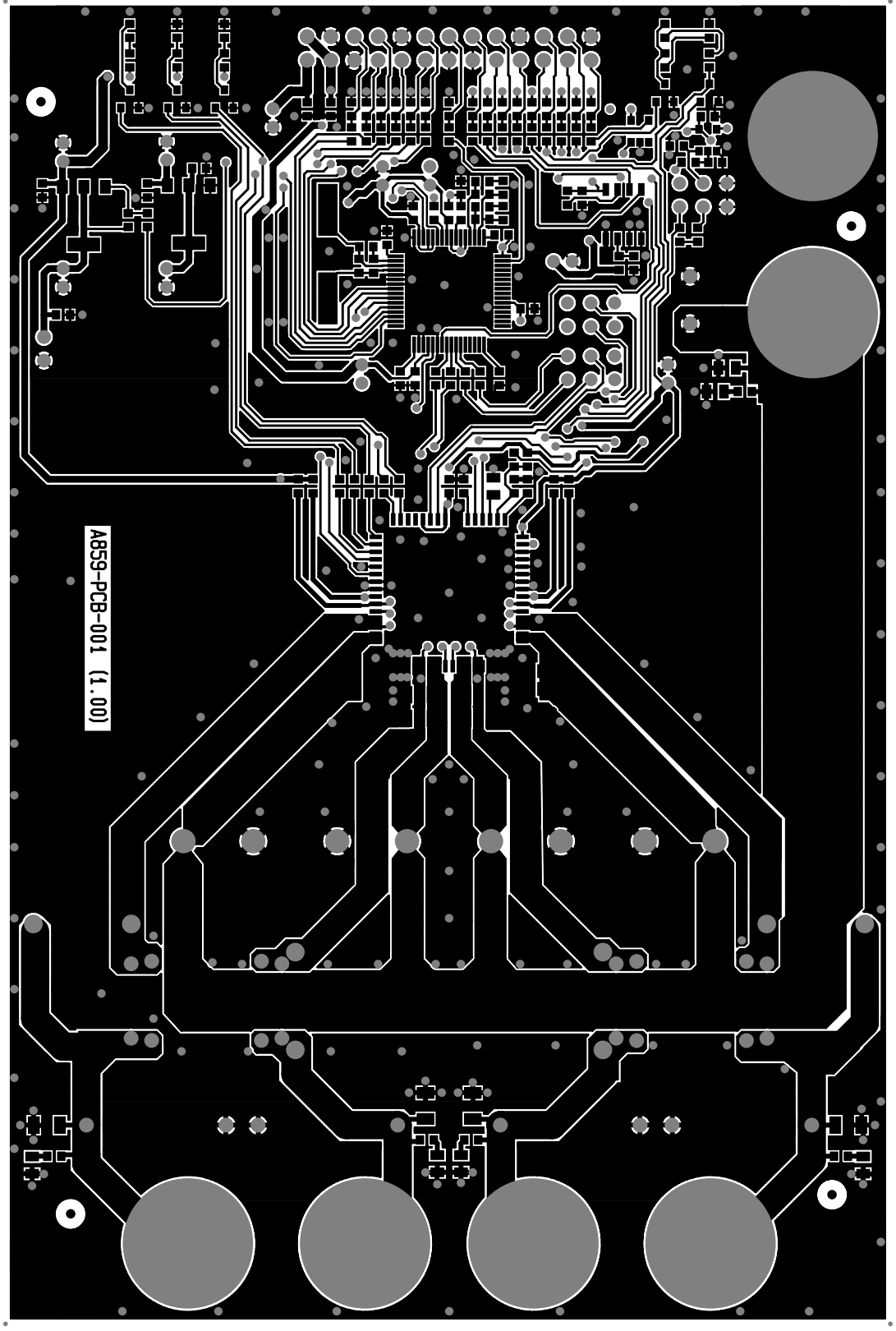

SILKSCREEN COMP	DpS 5399 091029
TI Denmark A859-PCB-001 (1.00)	

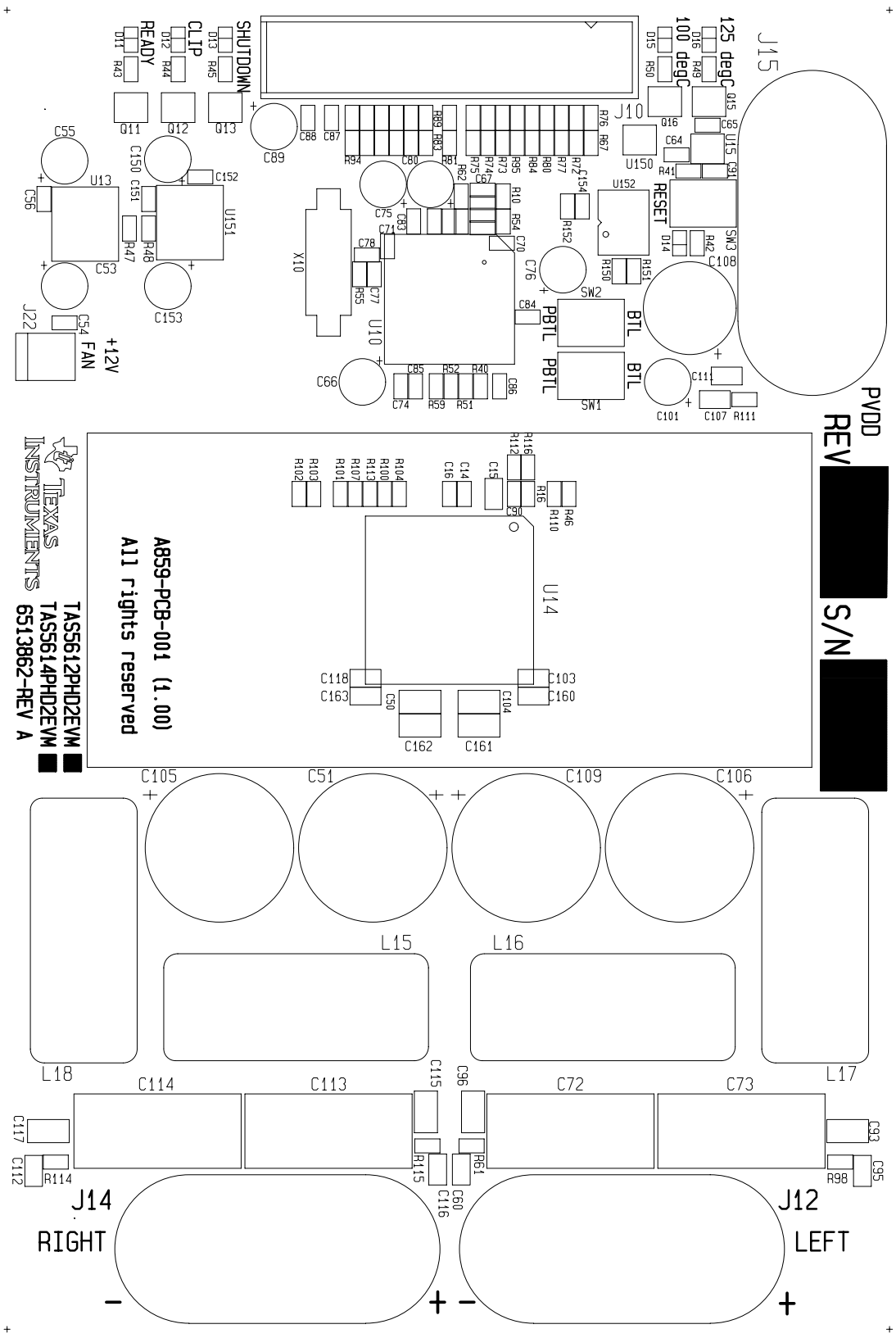

COMP. LAYOUT COMP	DpS 5399 091029
TI Denmark A859-PCB-001 (1.00)	

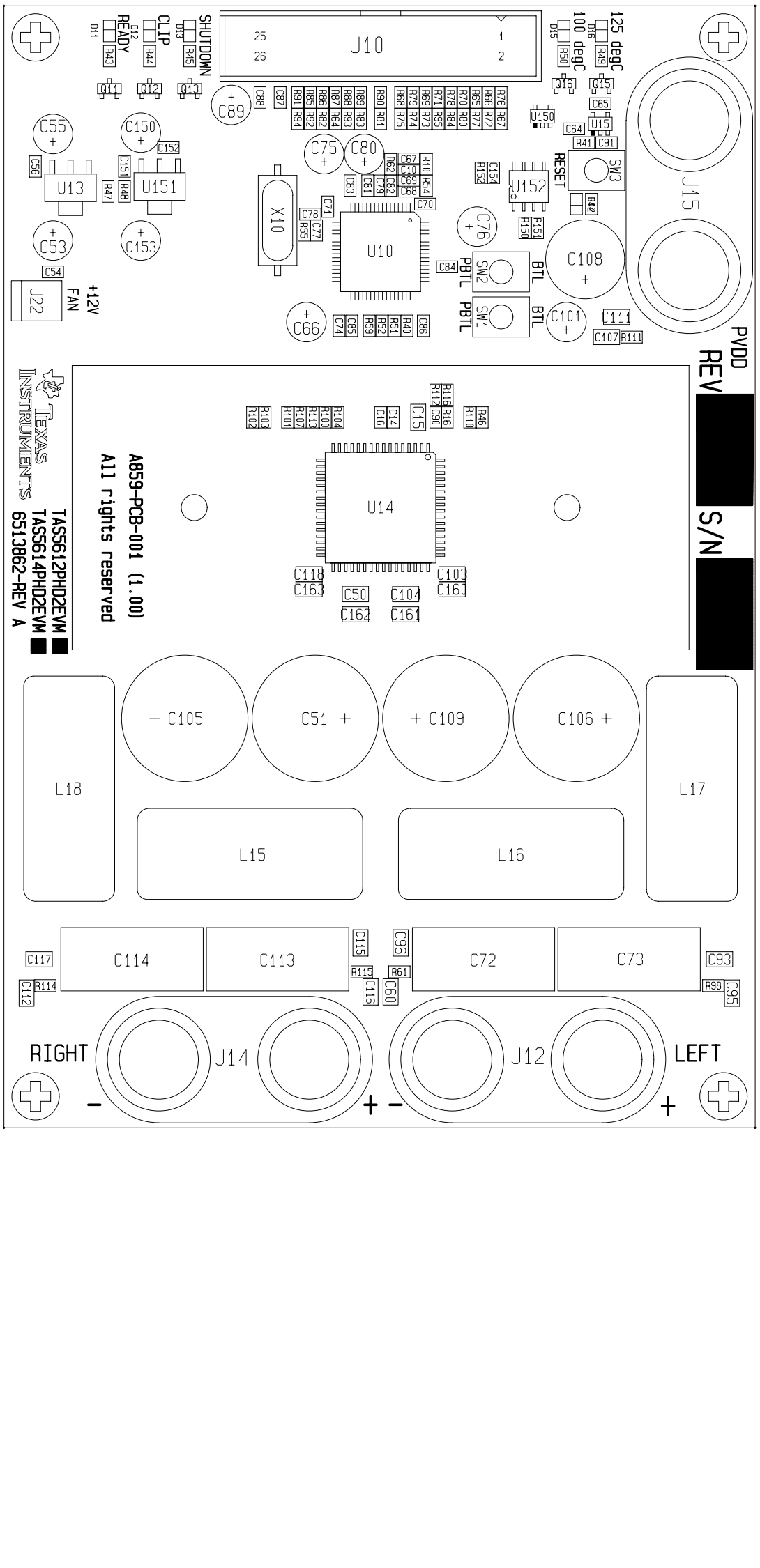

COMP. LAYOUT COMP	DpS 5399 091029
TI Denmark A859-PCB-001 (1.00)	

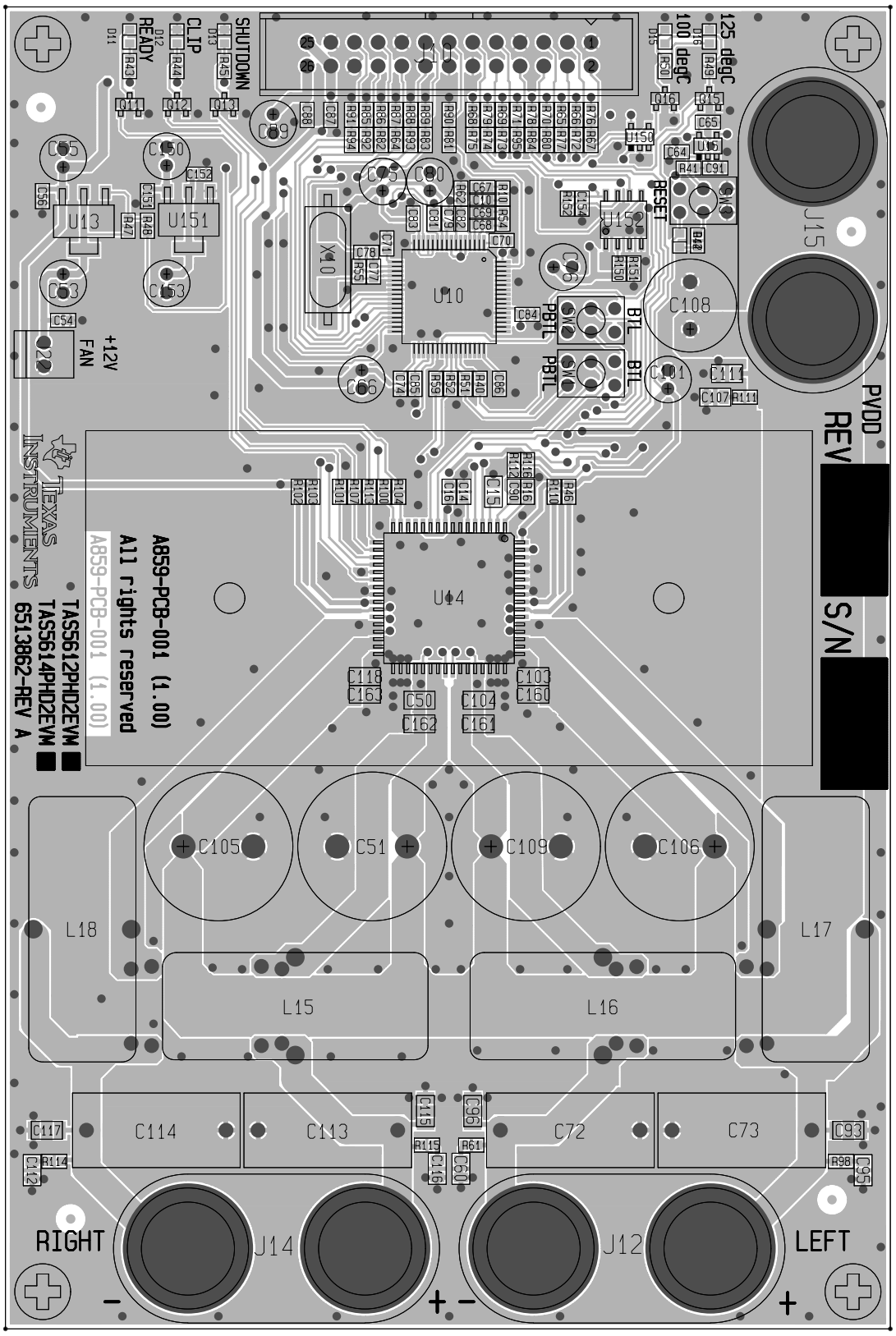

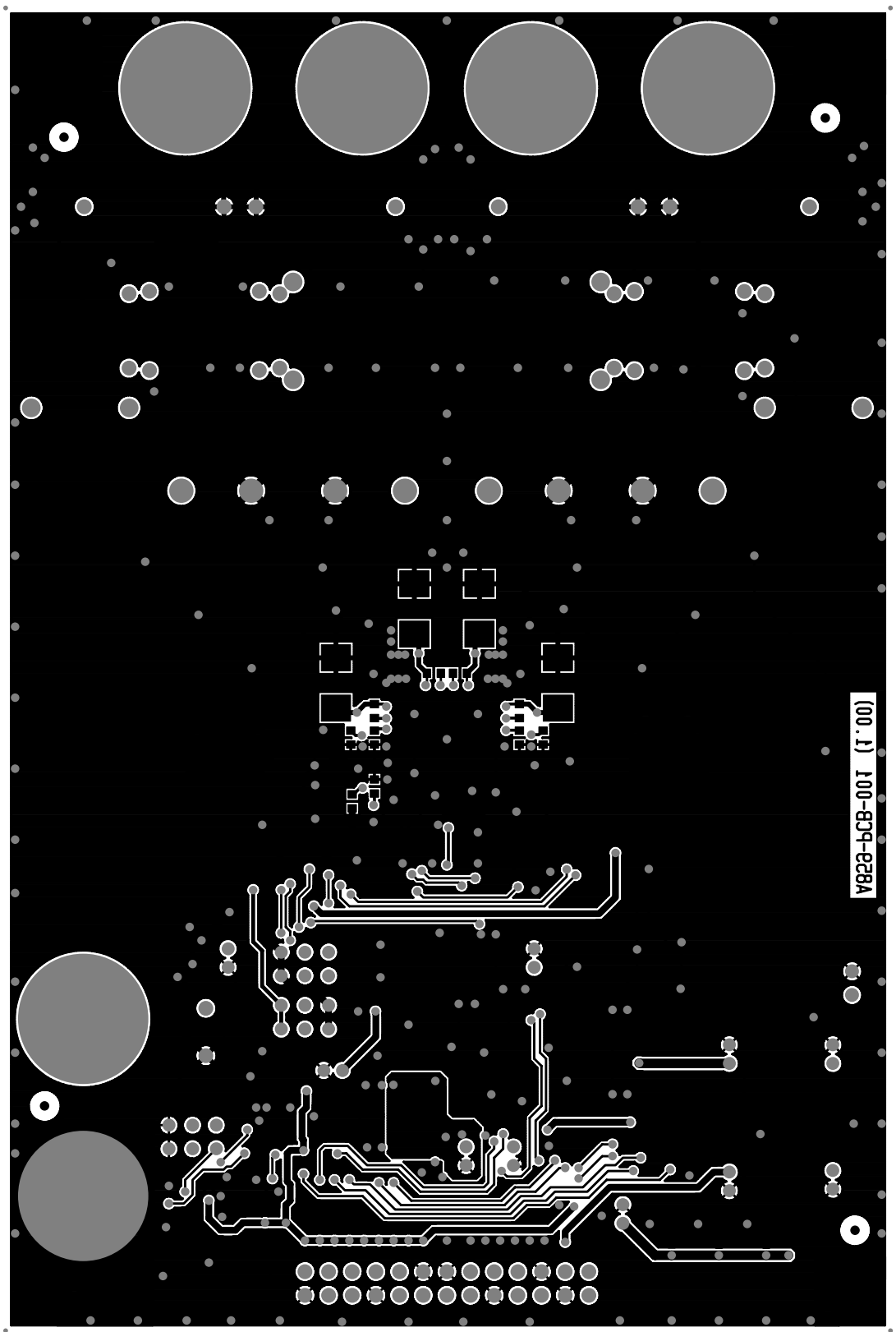

TI Document AM62A-HCB-100 (1.00)		
SOLDER SIDE		Page Size A4

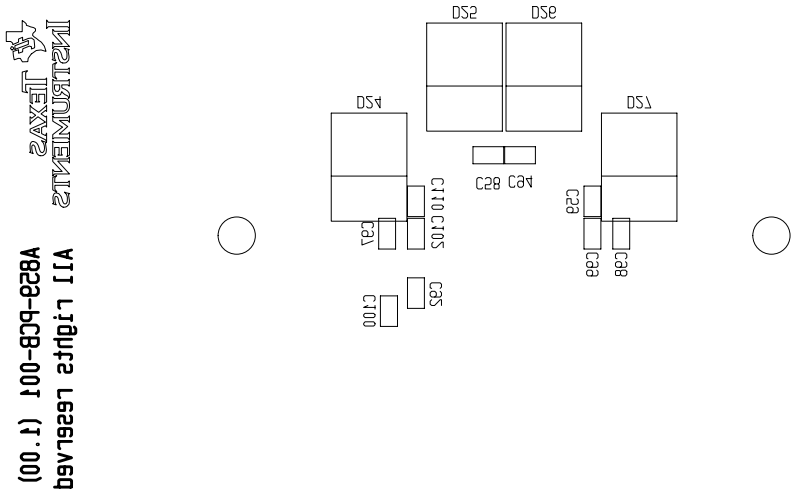

Texas Instruments
All rights reserved
A859-PCB-001 (1.00)

SILKSCREEN SOLD	Dps 2399 091029
TI Denmark A859-PCB-001 (1.00)	

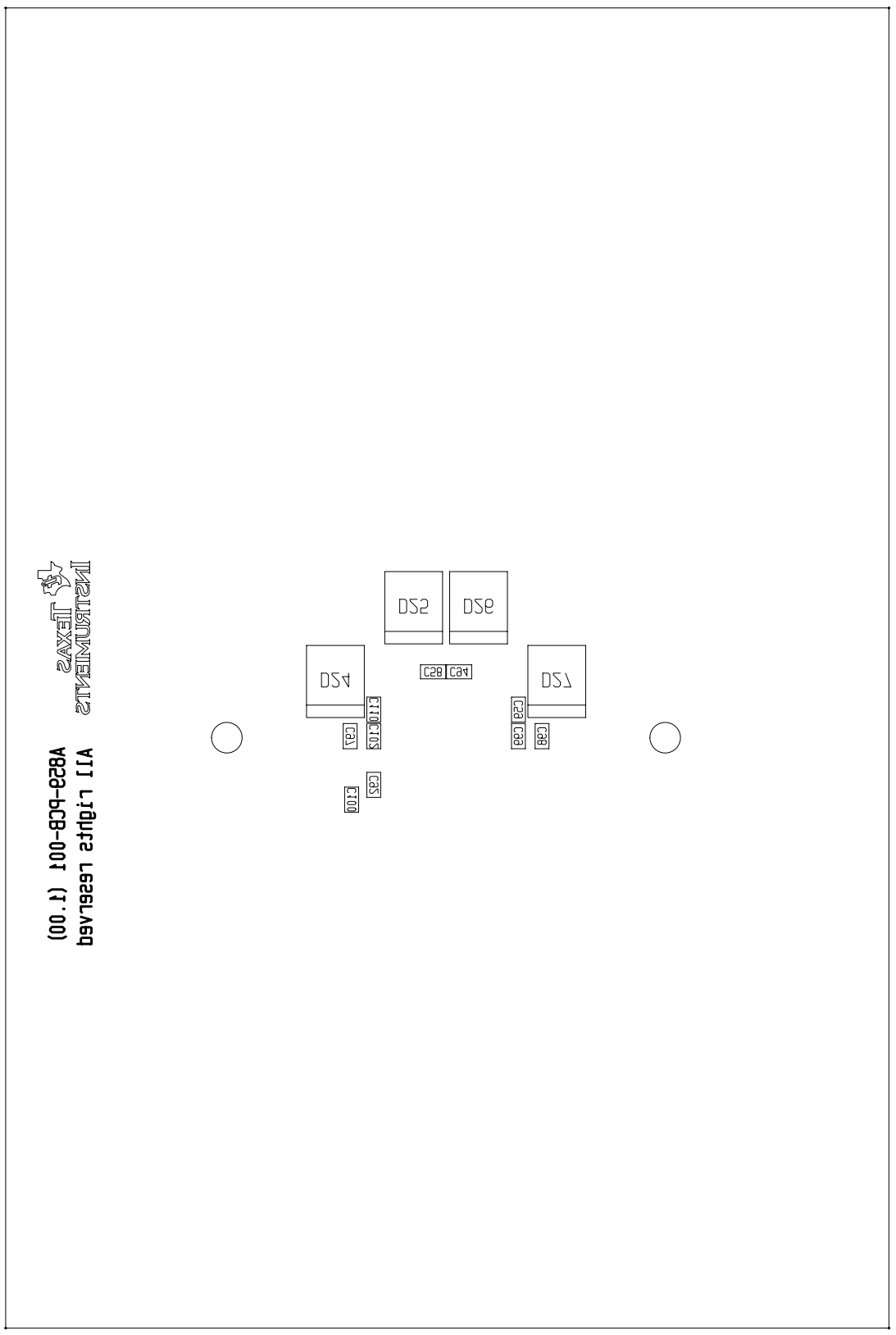

TI Denmark A859-PCB-001 (1.00)
COMP. LAYOUT SOLD | Dps 2399 091029

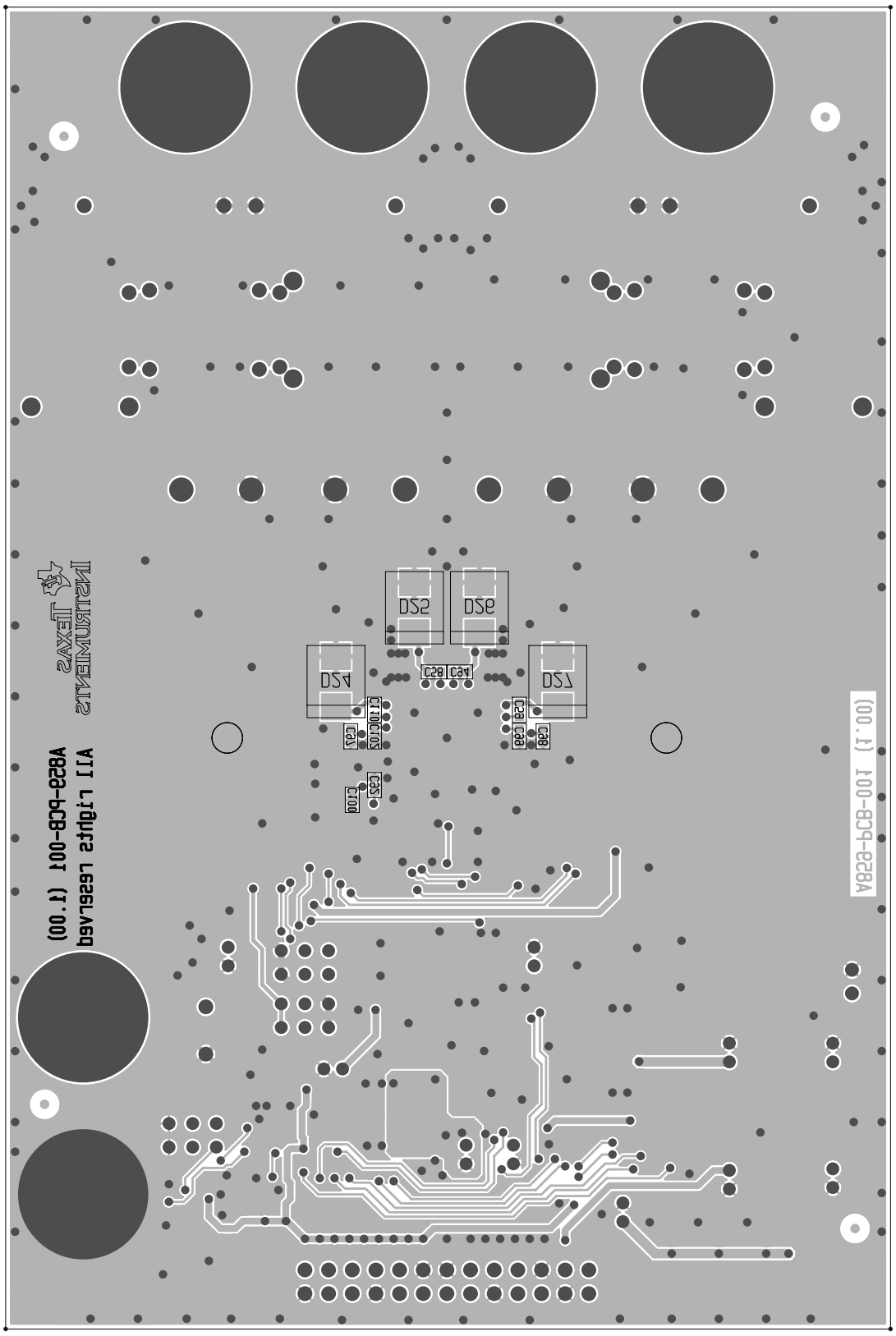

TI Confidential	ABSB-PCB-001 (1.00)
Component Layout	Page Size ESDLP0

TIC-HSINK-068(2.00)

Heat sink for 1 PHD package

27.Oct.2009
TIC-HSINK-068(2.00).dwg

Jonas L. Holm

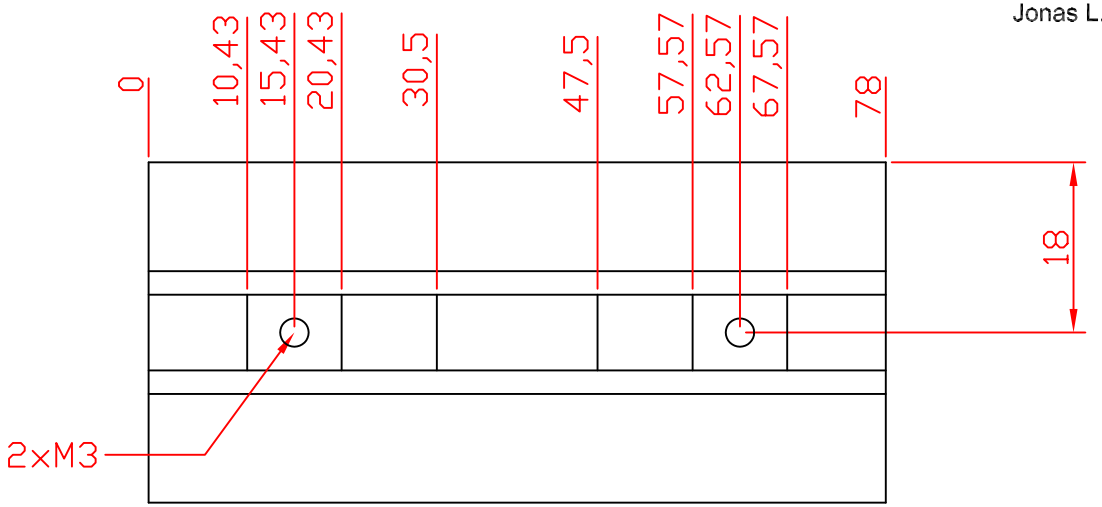

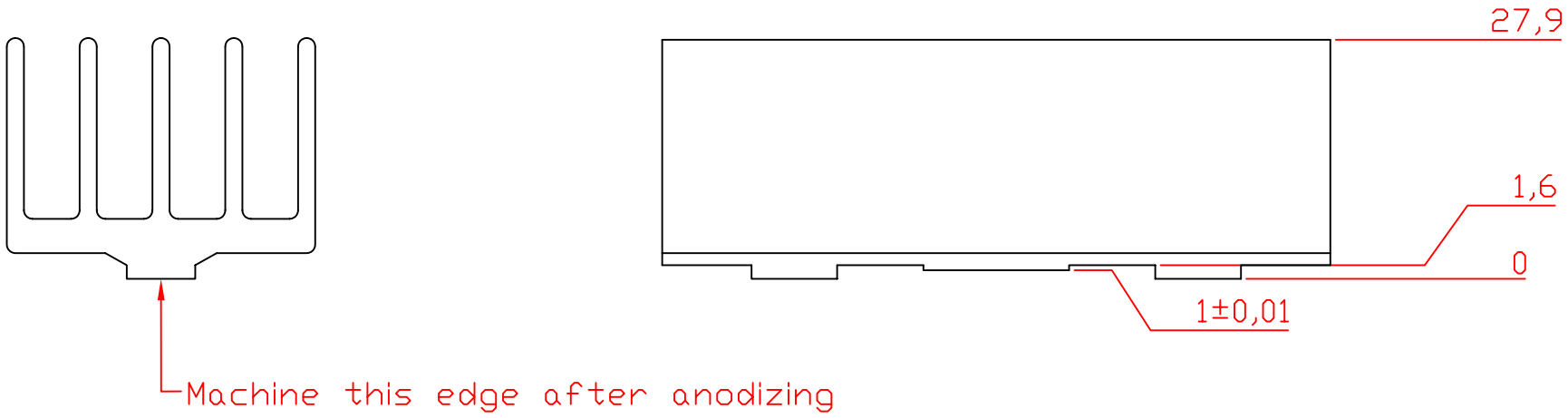

APPROX. SCALE: 1.25:1
DIMENSIONS: mm
MATERIAL: Profile TIC-HSINK-042(1.00), ALUMINUM
SURFACE: FREE OF SHARP EDGES
SURFACE TREATMENT: BLACK ANODIZED
TOLERANCES: +/- 0.1 mm

Company Confidential
Inductor Specification

DWG no.: TIC-INDC-020(1.00)

Text: 10µH / 5A / 30mΩ

Diagram:

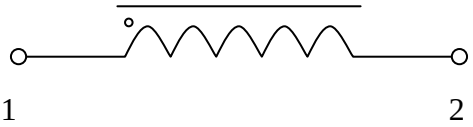

Material: Core: Micrometals T94-2
Wire: ø1.00mm Cu, one layer lacquer, 155°C

Foot-print top view

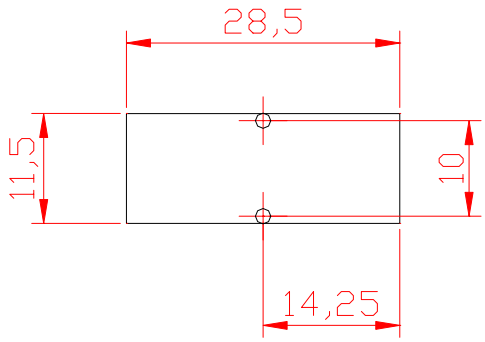

Mechanical:

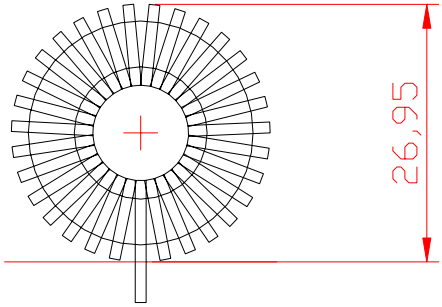

Lead length: 8mm-12mm, stripped and pre-tinned.

Production: Step 1: N1, 35 turns ø1.00mm cu 2L, start 1, end 2
Step 2: bend and strip/pre-tin leads.

Test: Inductance: pin 1 –2 9 – 11 µH @ 0.1Vrms/10kHz

Release date: 2005-04-12, Jonas Svendsen / Kim Madsen

Texas Instruments Denmark A/S
Lyngby Hovedgade 4
DK-2800 Kgs. Lyngby
Denmark

VAT-no. 20 53 16 73
Phone: +45 96 34 68 68
Fax: +45 38 88 78 99
Web: http:\\www.ti.com

IMPORTANT NOTICE

Texas Instruments Incorporated and its subsidiaries (TI) reserve the right to make corrections, modifications, enhancements, improvements, and other changes to its products and services at any time and to discontinue any product or service without notice. Customers should obtain the latest relevant information before placing orders and should verify that such information is current and complete. All products are sold subject to TI's terms and conditions of sale supplied at the time of order acknowledgment.

TI warrants performance of its hardware products to the specifications applicable at the time of sale in accordance with TI's standard warranty. Testing and other quality control techniques are used to the extent TI deems necessary to support this warranty. Except where mandated by government requirements, testing of all parameters of each product is not necessarily performed.

TI assumes no liability for applications assistance or customer product design. Customers are responsible for their products and applications using TI components. To minimize the risks associated with customer products and applications, customers should provide adequate design and operating safeguards.

TI does not warrant or represent that any license, either express or implied, is granted under any TI patent right, copyright, mask work right, or other TI intellectual property right relating to any combination, machine, or process in which TI products or services are used. Information published by TI regarding third-party products or services does not constitute a license from TI to use such products or services or a warranty or endorsement thereof. Use of such information may require a license from a third party under the patents or other intellectual property of the third party, or a license from TI under the patents or other intellectual property of TI.

Reproduction of TI information in TI data books or data sheets is permissible only if reproduction is without alteration and is accompanied by all associated warranties, conditions, limitations, and notices. Reproduction of this information with alteration is an unfair and deceptive business practice. TI is not responsible or liable for such altered documentation. Information of third parties may be subject to additional restrictions.

Resale of TI products or services with statements different from or beyond the parameters stated by TI for that product or service voids all express and any implied warranties for the associated TI product or service and is an unfair and deceptive business practice. TI is not responsible or liable for any such statements.

TI products are not authorized for use in safety-critical applications (such as life support) where a failure of the TI product would reasonably be expected to cause severe personal injury or death, unless officers of the parties have executed an agreement specifically governing such use. Buyers represent that they have all necessary expertise in the safety and regulatory ramifications of their applications, and acknowledge and agree that they are solely responsible for all legal, regulatory and safety-related requirements concerning their products and any use of TI products in such safety-critical applications, notwithstanding any applications-related information or support that may be provided by TI. Further, Buyers must fully indemnify TI and its representatives against any damages arising out of the use of TI products in such safety-critical applications.

TI products are neither designed nor intended for use in military/aerospace applications or environments unless the TI products are specifically designated by TI as military-grade or "enhanced plastic." Only products designated by TI as military-grade meet military specifications. Buyers acknowledge and agree that any such use of TI products which TI has not designated as military-grade is solely at the Buyer's risk, and that they are solely responsible for compliance with all legal and regulatory requirements in connection with such use.

TI products are neither designed nor intended for use in automotive applications or environments unless the specific TI products are designated by TI as compliant with ISO/TS 16949 requirements. Buyers acknowledge and agree that, if they use any non-designated products in automotive applications, TI will not be responsible for any failure to meet such requirements.

Following are URLs where you can obtain information on other Texas Instruments products and application solutions:

Products		**Applications**	
Amplifiers	amplifier.ti.com	Audio	www.ti.com/audio
Data Converters	dataconverter.ti.com	Automotive	www.ti.com/automotive
DLP® Products	www.dlp.com	Broadband	www.ti.com/broadband
DSP	dsp.ti.com	Digital Control	www.ti.com/digitalcontrol
Clocks and Timers	www.ti.com/clocks	Medical	www.ti.com/medical
Interface	interface.ti.com	Military	www.ti.com/military
Logic	logic.ti.com	Optical Networking	www.ti.com/opticalnetwork
Power Mgmt	power.ti.com	Security	www.ti.com/security
Microcontrollers	microcontroller.ti.com	Telephony	www.ti.com/telephony
RFID	www.ti-rfid.com	Video & Imaging	www.ti.com/video
RF/IF and ZigBee® Solutions	www.ti.com/lprf	Wireless	www.ti.com/wireless

Mailing Address: Texas Instruments, Post Office Box 655303, Dallas, Texas 75265
Copyright © 2009, Texas Instruments Incorporated