CC2640R2F-Q1 适用于汽车应用的 SimpleLink™ 低功耗 *Bluetooth*® 无线 MCU

1 特性

- 符合汽车应用要求
- 具有符合 AEC-Q100 标准的下列特性：
  - 器件温度等级 2：–40°C 至 +105°C 环境工作温度范围
  - 器件 HBM ESD 分类等级 2
  - 器件 CDM ESD 分类等级 C3
- 微控制器
  - 功能强大的 Arm® Cortex®-M3
  - EEMBC CoreMark® 评分：142
  - 高达 48MHz 的时钟速度
  - 275KB 非易失性存储器，包括 128KB 系统内可编程闪存
  - 高达 28KB 的系统 SRAM，其中 20KB 为超低泄漏 SRAM
  - 8KB SRAM 用于缓存或系统 RAM
  - 2 引脚 cJTAG 和 JTAG 调试
  - 支持无线 (OTA) 升级
- 超低功耗传感器控制器
  - 可独立于系统其余部分自主运行
  - 16 位架构
  - 2KB 超低泄漏 SRAM 用于代码和数据
- 高效代码大小架构，在 ROM 中装载驱动程序、*低功耗蓝牙*® 控制器和引导加载程序，让更多闪存供应用使用
- 符合 RoHS 标准的汽车级封装
  - 具有可润湿侧翼的 7mm × 7mm RGZ VQFN48
- 外设
  - 31 个 GPIO，所有数字外设引脚均可连接至任何 GPIO
  - 四个通用计时器模块（8 个 16 位计时器或 4 个 32 位计时器，均采用 PWM）
  - 12 位 ADC、200ksps、8 通道模拟多路复用器
  - 持续时间比较器
  - 超低功耗模拟比较器
  - 可编程电流源
  - UART
  - 2 个同步串行接口 (SSI)（SPI、MICROWIRE 和 TI）
  - I^2C、I^2S
  - 实时时钟 (RTC)
  - AES-128 安全模块
  - 真随机数发生器 (TRNG)
  - 支持八个电容感测按钮
  - 集成温度传感器
- 外部系统
  - 片上内部直流/直流转换器
  - 极少的外部元件
  - 与 SimpleLink™ CC2590 和 CC2592 范围扩展器无缝集成
- 低功耗
  - 宽电源电压范围：1.8V 至 3.8V
  - 有源模式 RX：6.1mA
  - 有源模式 TX (0dBm)：7.0mA
  - 有源模式 TX (+5dBm)：9.3mA
  - 有源模式 MCU：61µA/MHz
  - 有源模式 MCU：48.5CoreMark/mA
  - 有源模式传感器控制器：0.4mA + 8.2µA/MHz
  - 待机：1.3µA（RTC 运行，RAM/CPU 保持）
  - 关断：150nA（发生外部事件时唤醒）
- RF 部分
  - 与低功耗蓝牙 (BLE) 4.2 和 5 规范兼容的 2.4GHz 射频收发器
  - 出色的接收器灵敏度（对于低功耗蓝牙 1Mbps 为 –97dBm）、可选择性和阻断性能
  - 高达 +5dBm 的可编程输出功率
  - 对于低功耗蓝牙 1Mbps，链路预算为 102dB
  - 适用于符合各项全球射频规范的系统
    - ETSI EN 300 328 和 EN 300 440（欧洲）
    - FCC CFR47 第 15 部分（美国）
    - ARIB STD-T66（日本）
- 开发*工具和软件*
  - 全功能开发套件
  - Sensor Controller Studio
  - SmartRF™ Studio
  - IAR Embedded Workbench® for Arm®
  - Code Composer Studio™ 集成式开发环境 (IDE)
  - Code Composer Studio™ Cloud IDE

2 应用

- 汽车
  - 汽车门禁和安全系统
    - 无钥匙进入及启动 (PEPS) 系统
    - 手机即钥匙 (PaaK)
    - 遥控免钥匙进入 (RKE)
- 工业
  - 工厂自动化
  - 资产跟踪和管理
  - 人机界面 (HMI)
  - 门禁

本资源的原文使用英文撰写。 为方便起见，TI 提供了译文；由于翻译过程中可能使用了自动化工具，TI 不保证译文的准确性。 为确认准确性，请务必访问 ti.com 参考最新的英文版本（控制文档）。

3 说明

SimpleLink™ 低功耗 *Bluetooth* ® CC2640R2F-Q1 器件是一款符合 AEC-Q100 标准的无线微控制器 (MCU)，面向低功耗 *Bluetooth* ® 4.2 和 *Bluetooth* ® 5 汽车应用，例如无钥匙进入/启动系统 (PEPS)、遥控免钥匙进入 (RKE)、汽车共享、泊车引导、电缆更换和智能手机连接。

CC2640R2F-Q1 器件属于德州仪器 (TI)™ 的 SimpleLink™ MCU 平台系列。该平台包含 Wi-Fi®、低功耗 *Bluetooth* ®、Sub-1GHz、以太网、Zigbee®、Thread 和主机 MCU。所有这些器件均共用一个简单易用的通用开发环境，其中包含单个核心软件开发套件 (SDK) 和丰富的工具集。借助一次性集成的 SimpleLink™ 平台，用户可以将产品系列中的任何器件组合添加到自己的设计中，从而在设计要求变更时实现 100% 代码重用。更多信息，请访问 http://www.ti.com/wireless-connectivity/simplelink-solutions/overview/overview.html。

CC2640R2F-Q1 的有源射频和 MCU 电流消耗非常低，并且具有灵活的低功耗模式，可提供出色的电池寿命，使连接到汽车电池的节点依靠小型纽扣电池实现远距离操作并具有低功耗。出色的接收器灵敏度和可编程输出功率，为严苛的汽车射频环境提供其所需的出色射频性能。

CC2640R2F-Q1 无线 MCU 包含一个作为主应用处理器以 48MHz 速率运行的 32 位 Arm® Cortex®-M3 处理器，并包含嵌入于 ROM 中的低功耗 *Bluetooth* ® 4.2 控制器库和主机库。此架构可改善整体系统性能和功耗，并释放大量闪存以供应用使用。

此外，该器件符合 AEC-Q100 标准，达到 2 级温度范围（–40°C 至 +105°），并采用 7mm × 7mm 的具有可润湿侧翼的 VQFN 封装。可润湿侧翼有助于降低生产线成本，并通过光学检查焊点来提高可靠性。

可从 TI.com 免费获取低功耗蓝牙软件栈。

器件信息 (1)

器件型号	封装	封装尺寸
CC2640R2FTWRGZQ1	具有可湿性侧面的超薄型四方扁平无引线 (VQFN) 48 引脚封装	7.00mm × 7.00mm

(1) 如需了解更多信息，请参阅机械、封装和可订购信息。

Copyright © 2025 Texas Instruments Incorporated

4 功能方框图

方框图 显示了 CC2640R2F-Q1 器件的方框图。

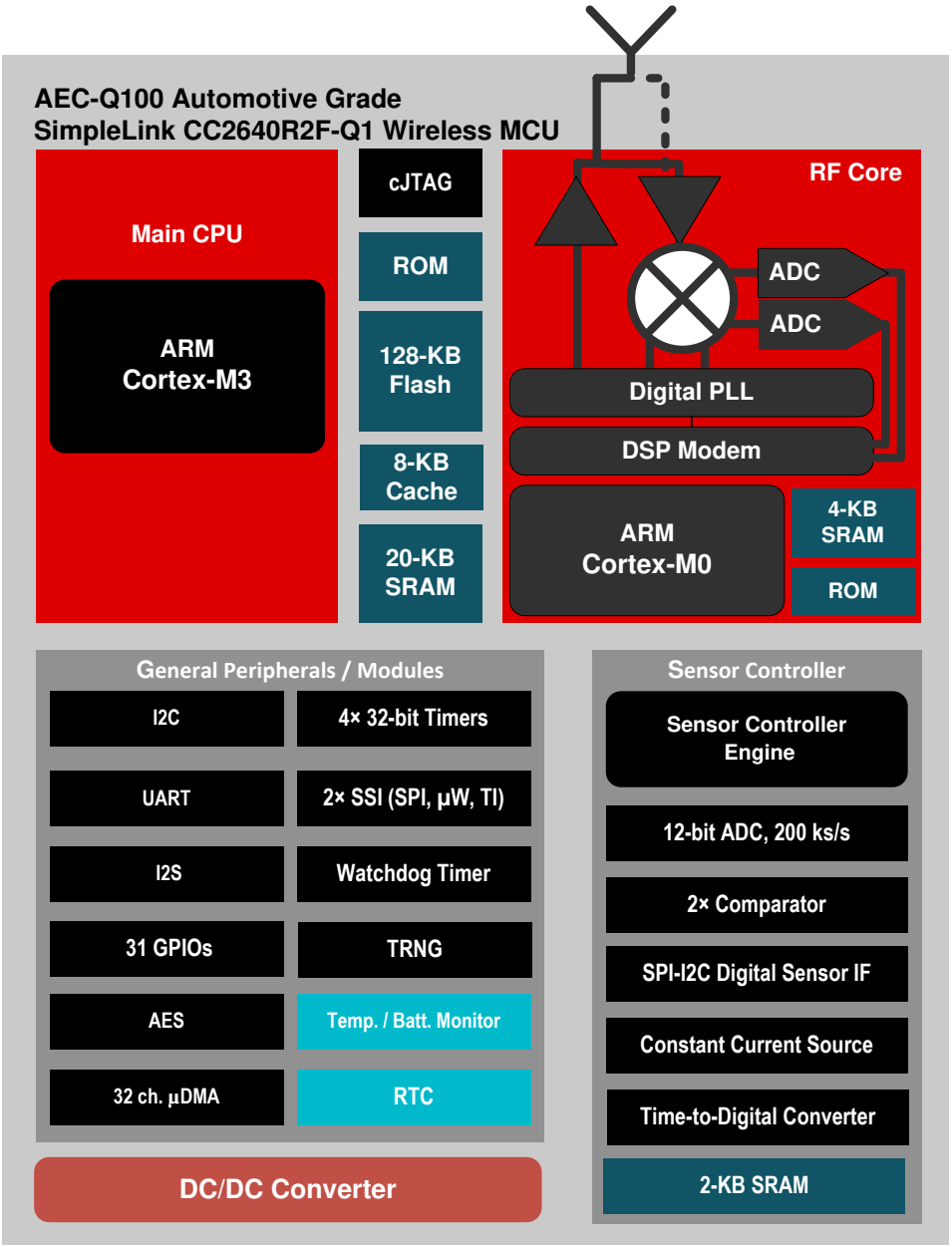

方框图

Table of Contents

1 特性 ... 1
2 应用 ... 1
3 说明 ... 2
4 功能方框图 ... 3
5 Device Comparison ... 5
5.1 Related Products ... 6
6 Pin Configuration and Functions ... 7
6.1 Pin Diagram—RGZ Package ... 7
6.2 Signal Descriptions—RGZ Package ... 8
6.3 Wettable Flanks ... 9
7 Specifications ... 10
7.1 Absolute Maximum Ratings ... 10
7.2 ESD Ratings ... 10
7.3 Recommended Operating Conditions ... 10
7.4 Power Consumption Summary ... 11
7.5 General Characteristics ... 11
7.6 1Mbps GFSK (Bluetooth Low Energy Technology)—RX ... 12
7.7 1Mbps GFSK (Bluetooth Low Energy Technology)—TX ... 13
7.8 24MHz Crystal Oscillator (XOSC_HF) ... 13
7.9 32.768kHz Crystal Oscillator (XOSC_LF) ... 13
7.10 48MHz RC Oscillator (RCOSC_HF) ... 14
7.11 32kHz RC Oscillator (RCOSC_LF) ... 14
7.12 ADC Characteristics ... 14
7.13 Temperature Sensor ... 15
7.14 Battery Monitor ... 15
7.15 Continuous Time Comparator ... 15
7.16 Low-Power Clocked Comparator ... 17
7.17 Programmable Current Source ... 17
7.18 Synchronous Serial Interface (SSI) ... 17
7.19 DC Characteristics ... 19
7.20 Thermal Resistance Characteristics for RGZ Package ... 20
7.21 Timing Requirements ... 21
7.22 Switching Characteristics ... 21
7.23 Typical Characteristics ... 22
8 Detailed Description ... 26
8.1 Overview ... 26
8.2 Main CPU ... 26
8.3 RF Core ... 26
8.4 Sensor Controller ... 27
8.5 Memory ... 28
8.6 Debug ... 28
8.7 Power Management ... 29
8.8 Clock Systems ... 30
8.9 General Peripherals and Modules ... 30
8.10 System Architecture ... 31
9 Application, Implementation, and Layout ... 32
9.1 Application Information ... 32
9.2 7 × 7 Internal Differential (7ID) Application Circuit ... 34
10 Device and Documentation Support ... 36
10.1 Device Nomenclature ... 36
10.2 Tools and Software ... 37
10.3 Documentation Support ... 38
10.4 Texas Instruments Low-Power RF Website ... 38
10.5 支持资源 ... 38
10.6 Trademarks ... 38
10.7 静电放电警告 ... 38
10.8 Export Control Notice ... 38
10.9 术语表 ... 38
11 Revision History ... 39
12 Mechanical, Packaging, and Orderable Information ... 40
12.1 Packaging Information ... 40

Copyright © 2025 Texas Instruments Incorporated

5 Device Comparison

表 5-1. Device Family Overview

DEVICE	PHY SUPPORT	FLASH (KB)	RAM (KB)	GPIO	PACKAGE(1)
CC2640R2F-Q1(2)	Bluetooth Low Energy (Normal, High Speed, Long Range, Automotive)	128	20	31	RGZ (Wettable Flanks), RGZ
CC2640R2Fxxx(2)	Bluetooth Low Energy (Normal, High Speed, Long Range)	128	20	31, 15, 14, 10	RGZ, RHB, YFV, RSM
CC2650F128xxx	Multi-Protocol(3)	128	20	31, 15, 10	RGZ, RHB, RSM
CC2640F128xxx	Bluetooth Low Energy (Normal)	128	20	31, 15, 10	RGZ, RHB, RSM
CC2630F128xxx	IEEE 802.15.4 (Zigbee/6LoWPAN)	128	20	31, 15, 10	RGZ, RHB, RSM
CC2620F128xxx	IEEE 802.15.4 (RF4CE)	128	20	31, 10	RGZ, RSM

(1) Package designator replaces the xxx in device name to form a complete device name, RGZ is 7mm × 7mm VQFN48, RHB is 5mm × 5mm VQFN32, RSM is 4mm × 4mm VQFN32, and YFV is 2.7mm × 2.7mm DSBGA.
(2) CC2640R2F-xxx devices contain Bluetooth 4.2 Host and Controller libraries in ROM, leaving more of the 128KB of flash available for the customer application when used with supported BLE-Stack software protocol stack releases. Actual use of ROM and flash by the protocol stack may vary depending on device software configuration. See Bluetooth Low Energy Stack for more details.
(3) The CC2650 device supports all PHYs and can be reflashed to run all the supported standards.

表 5-2. Typical (1) Flash Memory Available for Customer Applications

DEVICE	SIMPLE BLE PERIPHERAL (BT 4.0)(2)	SIMPLE BLE PERIPHERAL (BT 4.2)(2) (3)
CC2640R2Fxxx, CC2640R2F-Q1(4)	83KB	80KB
CC2640F128xxx, CC2650F128xxx	41KB	31KB

(1) Actual use of ROM and flash by the protocol stack will vary depending on the device software configuration. The values in this table are provided as guidance only.
(2) Application example with two services (GAP and Simple Profile). Compiled using IAR.
(3) BT4.2 configuration, including Secure Pairing, Privacy 1.2, and Data Length Extension
(4) Bluetooth Low Energy applications running on the CC2640R2F-Q1 device make use of up to 115KB of system ROM and up to 32KB of RF Core ROM to minimize flash usage. The maximum amount of nonvolatile memory available for Bluetooth Low Energy applications on the CC2640R2F-Q1 device is thus 275KB (128KB flash + 147KB ROM).

5.1 Related Products

Wireless Connectivity	The wireless connectivity portfolio offers a wide selection of low power RF solutions suitable for a broad range of applications. The offerings range from fully customized solutions to turn key offerings with pre-certified hardware and software (protocol).
TI's SimpleLink™ Sub-1GHz Wireless MCUs	Long-range, low-power wireless connectivity solutions are offered in a wide range of Sub-1GHz ISM bands.
Design & development	Review design and development resources that are available for this product.
SimpleLink™ CC2640R2 Wireless MCU LaunchPad™ Development Kit	The CC2640R2 LaunchPad™ development kit brings easy Bluetooth Low Energy (BLE) connection to the LaunchPad ecosystem with the SimpleLink ultra-low power CC26xx family of devices. Compared to the CC2650 LaunchPad kit, the CC2640R2 LaunchPad kit provides the following: • More free flash memory for the user application in the CC2640R2 wireless MCU • Out-of-the-box support for Bluetooth 4.2 specification • 4× faster over-the-air download speed compared to Bluetooth 4.1
SimpleLink™ Bluetooth Low Energy/ Multistandard SensorTag	The SensorTag IoT kit invites you to realize your cloud-connected product idea. The SensorTag includes 10 low-power MEMS sensors in a tiny red package, and it is expandable with DevPacks to make it easy to add your own sensors or actuators.
Reference Designs for CC2640	TI Reference Design Library is a robust reference design library spanning analog, embedded processor and connectivity. Created by TI experts to help you jump-start your system design, all TI Designs include schematic or block diagrams, BOMs and design files to speed your time to market. Search and download designs at ti.com/tidesigns.

Copyright © 2025 Texas Instruments Incorporated

6 Pin Configuration and Functions

6.1 Pin Diagram—RGZ Package

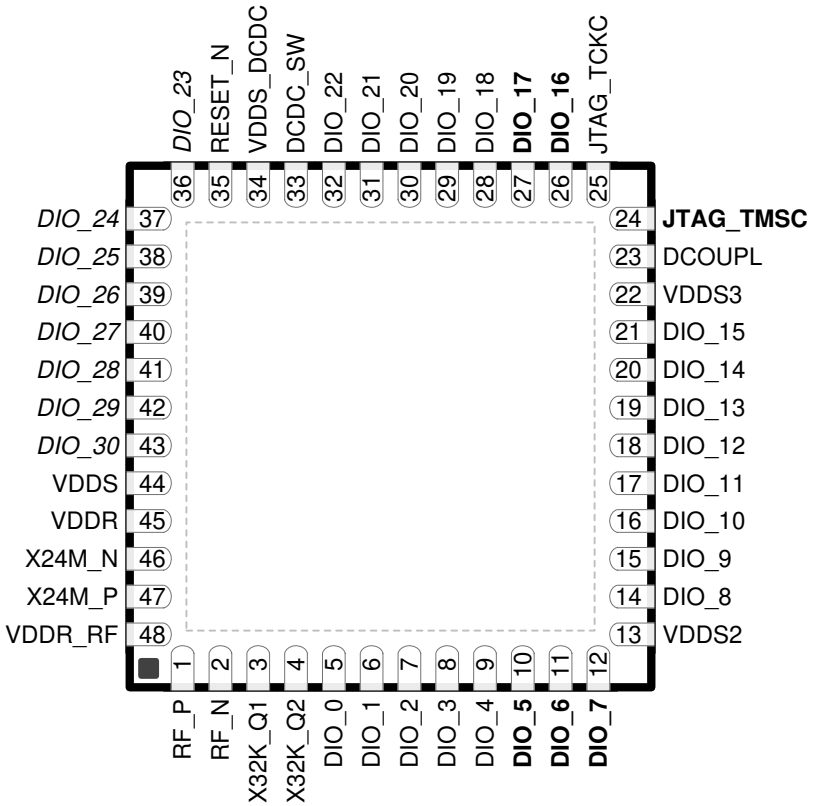

The following I/O pins marked in **bold** have high-drive capabilities:

- Pin 10: DIO_5
- Pin 11: DIO_6
- Pin 12: DIO_7
- Pin 24: JTAG_TMSC
- Pin 26: DIO_16
- Pin 27: DIO_17

The following I/O pins marked in *italics* have analog capabilities:

- Pin 36: DIO_23
- Pin 37: DIO_24
- Pin 38: DIO_25
- Pin 39: DIO_26
- Pin 40: DIO_27
- Pin 41: DIO_28
- Pin 42: DIO_29
- Pin 43: DIO_30

图 6-1. 48-Pin RGZ Packagewith Wettable Flanks, 7mm × 7mm Pinout, 0.5mm Pitch (Top View)

6.2 Signal Descriptions—RGZ Package

表 6-1. Signal Descriptions—RGZ Package

NAME	NO.	TYPE	DESCRIPTION
DCDC_SW	33	Power	Output from internal DC/DC[(1)]
DCOUPL	23	Power	1.27V regulated digital-supply decoupling capacitor[(2)]
DIO_0	5	Digital I/O	GPIO, Sensor Controller
DIO_1	6	Digital I/O	GPIO, Sensor Controller
DIO_2	7	Digital I/O	GPIO, Sensor Controller
DIO_3	8	Digital I/O	GPIO, Sensor Controller
DIO_4	9	Digital I/O	GPIO, Sensor Controller
DIO_5	10	Digital I/O	GPIO, Sensor Controller, high-drive capability
DIO_6	11	Digital I/O	GPIO, Sensor Controller, high-drive capability
DIO_7	12	Digital I/O	GPIO, Sensor Controller, high-drive capability
DIO_8	14	Digital I/O	GPIO
DIO_9	15	Digital I/O	GPIO
DIO_10	16	Digital I/O	GPIO
DIO_11	17	Digital I/O	GPIO
DIO_12	18	Digital I/O	GPIO
DIO_13	19	Digital I/O	GPIO
DIO_14	20	Digital I/O	GPIO
DIO_15	21	Digital I/O	GPIO
DIO_16	26	Digital I/O	GPIO, JTAG_TDO, high-drive capability
DIO_17	27	Digital I/O	GPIO, JTAG_TDI, high-drive capability
DIO_18	28	Digital I/O	GPIO
DIO_19	29	Digital I/O	GPIO
DIO_20	30	Digital I/O	GPIO
DIO_21	31	Digital I/O	GPIO
DIO_22	32	Digital I/O	GPIO
DIO_23	36	Digital/Analog I/O	GPIO, Sensor Controller, Analog
DIO_24	37	Digital/Analog I/O	GPIO, Sensor Controller, Analog
DIO_25	38	Digital/Analog I/O	GPIO, Sensor Controller, Analog
DIO_26	39	Digital/Analog I/O	GPIO, Sensor Controller, Analog
DIO_27	40	Digital/Analog I/O	GPIO, Sensor Controller, Analog
DIO_28	41	Digital/Analog I/O	GPIO, Sensor Controller, Analog
DIO_29	42	Digital/Analog I/O	GPIO, Sensor Controller, Analog
DIO_30	43	Digital/Analog I/O	GPIO, Sensor Controller, Analog
JTAG_TMSC	24	Digital I/O	JTAG TMSC, high-drive capability
JTAG_TCKC	25	Digital I/O	JTAG TCKC
RESET_N	35	Digital input	Reset, active-low. No internal pullup.
RF_P	1	RF I/O	Positive RF input signal to LNA during RX Positive RF output signal to PA during TX
RF_N	2	RF I/O	Negative RF input signal to LNA during RX Negative RF output signal to PA during TX
VDDR	45	Power	Connect to output of internal DC/DC[(2) (3)]
VDDR_RF	48	Power	Connect to output of internal DC/DC[(2) (4)]

Copyright © 2025 Texas Instruments Incorporated

表 6-1. Signal Descriptions—RGZ Package（续）

NAME	NO.	TYPE	DESCRIPTION
VDDS	44	Power	1.8V to 3.8V main chip supply(1)
VDDS2	13	Power	1.8V to 3.8V DIO supply(1)
VDDS3	22	Power	1.8V to 3.8V DIO supply(1)
VDDS_DCDC	34	Power	1.8V to 3.8V DC/DC supply
X32K_Q1	3	Analog I/O	32kHz crystal oscillator pin 1
X32K_Q2	4	Analog I/O	32kHz crystal oscillator pin 2
X24M_N	46	Analog I/O	24MHz crystal oscillator pin 1
X24M_P	47	Analog I/O	24MHz crystal oscillator pin 2
EGP		Power	Ground—Exposed Ground Pad

(1) See the technical reference manual listed in 节 10.3 for more details.
(2) Do not supply external circuitry from this pin.
(3) If internal DC/DC is not used, this pin is supplied internally from the main LDO.
(4) If internal DC/DC is not used, this pin must be connected to VDDR for supply from the main LDO.

6.3 Wettable Flanks

The automotive industry requires original equipment manufacturers (OEMs) to perform 100% automated visual inspection (AVI) post-assembly to ensure that cars meet the current demands for safety and high reliability. Standard quad-flat no-lead (VQFN) packages do not have solderable or exposed pins/terminals that are easily viewed. It is therefore difficult to determine visually whether or not the package is successfully soldered onto the printed circuit board (PCB). To resolve the issue of side-lead wetting of leadless packaging for automotive and commercial component manufacturers, the wettable-flank process was developed. The wettable flanks on the VQFN package provide a visual indicator of solderability and thereby lower the inspection time and manufacturing costs.

The CC2640R2F-Q1 device is assembled using an automotive-grade VQFN package with wettable flanks.

7 Specifications

7.1 Absolute Maximum Ratings

over operating free-air temperature range (unless otherwise noted)[(1) (2)]

		MIN	MAX	UNIT
Supply voltage, VDDS[(3)]	VDDR supplied by internal DC/DC regulator or internal GLDO. VDDS_DCDC connected to VDDS on PCB.	– 0.3	4.1	V
Voltage on any digital pin[(4) (5)]		– 0.3	VDDS + 0.3, max 4.1	V
Voltage on crystal oscillator pins, X32K_Q1, X32K_Q2, X24M_N and X24M_P		– 0.3	VDDR + 0.3, max 2.25	V
Voltage on ADC input (V_{in})	Voltage scaling enabled	– 0.3	VDDS	V
	Voltage scaling disabled, internal reference	– 0.3	1.49	
	Voltage scaling disabled, VDDS as reference	– 0.3	VDDS / 2.9	
Input RF level			5	dBm
T_{stg}	Storage temperature	– 40	150	°C

(1) All voltage values are with respect to ground, unless otherwise noted.
(2) Stresses beyond those listed under *Absolute Maximum Ratings* may cause permanent damage to the device. These are stress ratings only, and functional operation of the device at these or any other conditions beyond those indicated under *Recommended Operating Conditions* is not implied. Exposure to absolute-maximum-rated conditions for extended periods may affect device reliability.
(3) VDDS2 and VDDS3 need to be at the same potential as VDDS.
(4) Including analog-capable DIO.
(5) Injection current is not supported on any GPIO pin.

7.2 ESD Ratings

				VALUE	UNIT
V_{ESD}	Electrostatic discharge	Human Body Model (HBM), per AEC Q100-002[(1) (2)]	All pins	±2000	V
		Charged Device Model (CDM), per AEC Q100-011[(3)]	XOCS pins 46, 47	±250	
			All other pins	±500	

(1) AEC Q100-002 indicates HBM stressing is done in accordance with the ANSI/ESDA/JEDEC JS-001 specification.
(2) JEDEC document JEP155 states that 500V HBM allows safe manufacturing with a standard ESD control process.
(3) JEDEC document JEP157 states that 250V CDM allows safe manufacturing with a standard ESD control process.

7.3 Recommended Operating Conditions

over operating free-air temperature range (unless otherwise noted)

		MIN	MAX	UNIT
Ambient temperature		– 40	105	°C
Operating supply voltage, VDDS	For operation in battery-powered and 3.3V systems (internal DC/DC can be used to minimize power consumption)	1.8	3.8	V
GPIO Input Voltage		0	VDDS	V

Copyright © 2025 Texas Instruments Incorporated

7.4 Power Consumption Summary

Measured on the TI CC2640Q1EM-7ID reference design with T_c = 25°C, V_{DDS} = 3.0V with internal DC/DC converter, unless otherwise noted.

PARAMETER		TEST CONDITIONS	MIN	TYP	MAX	UNIT
I_{core}	Core current consumption	Reset. RESET_N pin asserted or VDDS below power-on-reset (POR) threshold		100		nA
		Shutdown. No clocks running, no retention		150		
		Standby. With RTC, CPU, RAM and (partial) register retention. RCOSC_LF		1.3		µA
		Standby. With RTC, CPU, RAM and (partial) register retention. XOSC_LF		1.5		
		Standby. With Cache, RTC, CPU, RAM and (partial) register retention. RCOSC_LF		3.4		
		Standby. With Cache, RTC, CPU, RAM and (partial) register retention. XOSC_LF		3.6		
		Idle. Supply Systems and RAM powered.		650		
		Active. Core running CoreMark		1.45mA + 31µA/MHz		
		Radio RX		6.1		mA
		Radio TX, 0dBm output power		7.0		
		Radio TX, 5dBm output power		9.3		
Peripheral Current Consumption (Adds to core current I_{core} for each peripheral unit activated)(1)						
I_{peri}	Peripheral power domain	Delta current with domain enabled		20		µA
	Serial power domain	Delta current with domain enabled		13		µA
	RF Core	Delta current with power domain enabled, clock enabled, RF core idle		237		µA
	µDMA	Delta current with clock enabled, module idle		130		µA
	Timers	Delta current with clock enabled, module idle		113		µA
	I^2C	Delta current with clock enabled, module idle		12		µA
	I2S	Delta current with clock enabled, module idle		36		µA
	SSI	Delta current with clock enabled, module idle		93		µA
	UART	Delta current with clock enabled, module idle		164		µA

(1) I_{peri} is not supported in Standby or Shutdown.

7.5 General Characteristics

T_c = 25°C, V_{DDS} = 3.0V, unless otherwise noted.

PARAMETER	TEST CONDITIONS	MIN	TYP	MAX	UNIT
FLASH MEMORY					
Supported flash erase cycles before failure		100			k Cycles
Maximum number of write operations per row before erase(1)				83	write operations
Flash retention	105°C	11.4			Years at 105°C
Flash page/sector erase current	Average delta current		12.6		mA
Flash page/sector size			4		KB
Flash page/sector erase time(2)	Zero cycles		8		ms
Flash page/sector erase time (2)	30 000 cycles			4000	ms
Flash write current	Average delta current, 4 bytes at a time		8.15		mA

7.5 General Characteristics（续）

T_c = 25°C, V_{DDS} = 3.0V, unless otherwise noted.

PARAMETER	TEST CONDITIONS	MIN	TYP	MAX	UNIT
Flash write time	4 bytes at a time		8		µs

(1) Each row is 2048 bits (or 256 bytes) wide.
(2) This number is dependent on Flash aging and will increase over time and erase cycles.

7.6 1Mbps GFSK (Bluetooth Low Energy Technology)—RX

Measured on the TI CC2640Q1EM-7ID reference design with T_c = 25°C, V_{DDS} = 3.0V, f_{RF} = 2440MHz, unless otherwise noted.

PARAMETER	TEST CONDITIONS	MIN	TYP	MAX	UNIT
Receiver sensitivity	Differential mode. Measured at the CC2640Q1EM-7ID SMA connector, BER = 10^{-3}		–97		dBm
Receiver saturation	Differential mode. Measured at the CC2640Q1EM-7ID SMA connector, BER = 10^{-3}		4		dBm
Frequency error tolerance	Difference between the incoming carrier frequency and the internally generated carrier frequency	–350		350	kHz
Data rate error tolerance	Difference between incoming data rate and the internally generated data rate	–750		750	ppm
Co-channel rejection[3]	Wanted signal at –67dBm, modulated interferer in channel, BER = 10^{-3}		–6		dB
Selectivity, ±1MHz[3]	Wanted signal at –67dBm, modulated interferer at ±1MHz, BER = 10^{-3}		7 / 2[1]		dB
Selectivity, ±2MHz[3]	Wanted signal at –67dBm, modulated interferer at ±2MHz, Image frequency is at –2MHz, BER = 10^{-3}		39 / 17[2] [1]		dB
Selectivity, ±3MHz[3]	Wanted signal at –67dBm, modulated interferer at ±3MHz, BER = 10^{-3}		38 / 30[1]		dB
Selectivity, ±4MHz[3]	Wanted signal at –67dBm, modulated interferer at ±4MHz, BER = 10^{-3}		42 / 36[1]		dB
Selectivity, ±5MHz or more[3]	Wanted signal at –67dBm, modulated interferer at ≥ ±5MHz, BER = 10^{-3}		32		dB
Selectivity, Image frequency[3]	Wanted signal at –67dBm, modulated interferer at image frequency, BER = 10^{-3}		17		dB
Selectivity, Image frequency ±1MHz[3]	Wanted signal at –67dBm, modulated interferer at ±1MHz from image frequency, BER = 10^{-3}		2 / 30[1]		dB
Out-of-band blocking [4]	30MHz to 2000MHz		–20		dBm
Out-of-band blocking	2003MHz to 2399MHz		–5		dBm
Out-of-band blocking	2484MHz to 2997MHz		–8		dBm
Out-of-band blocking	3000MHz to 12.75GHz		–8		dBm
Intermodulation	Wanted signal at 2402MHz, –64dBm. Two interferers at 2405 and 2408MHz respectively, at the given power level		–34		dBm
Spurious emissions, 30MHz to 1000MHz	Conducted measurement in a 50Ω single-ended load. Suitable for systems targeting compliance with EN 300 328, EN 300 440, FCC CFR47, Part 15 and ARIB STD-T-66		–65		dBm
Spurious emissions, 1GHz to 12.75 GHz	Conducted measurement in a 50Ω single-ended load. Suitable for systems targeting compliance with EN 300 328, EN 300 440, FCC CFR47, Part 15 and ARIB STD-T-66		–52		dBm
RSSI dynamic range			70		dB
RSSI accuracy			±4		dB

(1) X / Y, where X is +N MHz and Y is –N MHz.
(2) +2MHz selectivity is reduced to 33dB when using radio FW supporting 2Mbps and Coded PHYs

Copyright © 2025 Texas Instruments Incorporated

(3) Numbers given as I/C dB.
(4) Excluding one exception at F_{wanted} / 2, per Bluetooth Specification.

7.7 1Mbps GFSK (Bluetooth Low Energy Technology)—TX

Measured on the TI CC2640Q1EM-7ID reference design with T_c = 25°C, V_{DDS} = 3.0V, f_{RF} = 2440MHz, unless otherwise noted.

PARAMETER	TEST CONDITIONS	MIN	TYP	MAX	UNIT
Output power, highest setting	Differential mode, delivered to a single-ended 50 Ω load through a balun		5		dBm
Output power, lowest setting	Delivered to a single-ended 50 Ω load through a balun		–21		dBm
Spurious emission conducted measurement[1]	f < 1GHz, outside restricted bands		–44		dBm
	f < 1GHz, restricted bands ETSI		–62		dBm
	f < 1GHz, restricted bands FCC		–62		dBm
	f > 1GHz, including harmonics		–55		dBm

(1) Suitable for systems targeting compliance with worldwide radio-frequency regulations ETSI EN 300 328 and EN 300 440 (Europe), FCC CFR47 Part 15 (US), and ARIB STD-T66 (Japan).

7.8 24MHz Crystal Oscillator (XOSC_HF)

T_c = 25°C, V_{DDS} = 3.0V, unless otherwise noted.[1]

PARAMETER	TEST CONDITIONS	MIN	TYP	MAX	UNIT
ESR Equivalent series resistance[2]	6pF < C_L ⩽ 9pF		20	60	Ω
ESR Equivalent series resistance[2]	5pF < C_L ⩽ 6pF			80	Ω
L_M Motional inductance[2]	Relates to load capacitance (C_L in Farads)		< $1.6 \times 10^{-24} / C_L^{2}$		H
C_L Crystal load capacitance[2]		5		9	pF
Crystal frequency[2] [3]			24		MHz
Crystal frequency tolerance[2] [4]		–40		40	ppm
Start-up time[3] [5]			150		µs

(1) Probing or otherwise stopping the crystal while the DC/DC converter is enabled may cause permanent damage to the device.
(2) The crystal manufacturer's specification must satisfy this requirement
(3) Measured on the TI CC2640Q1EM-7ID reference design with T_c = 25°C, V_{DDS} = 3.0V
(4) Includes initial tolerance of the crystal, drift over temperature, ageing and frequency pulling due to incorrect load capacitance, as per Bluetooth specification.
(5) Kick-started based on a temperature and aging compensated RCOSC_HF using precharge injection.

7.9 32.768kHz Crystal Oscillator (XOSC_LF)

T_c = 25°C, V_{DDS} = 3.0V, unless otherwise noted.

PARAMETER	TEST CONDITIONS	MIN	TYP	MAX	UNIT
Crystal frequency[1]			32.768		kHz
Crystal frequency tolerance, Bluetooth low-energy applications[1] [2]		–500		500	ppm
ESR Equivalent series resistance[1]			30	100	kΩ
C_L Crystal load capacitance[1]		6		12	pF

(1) The crystal manufacturer's specification must satisfy this requirement.
(2) Includes initial tolerance of the crystal, drift over temperature, ageing and frequency pulling due to incorrect load capacitance, as per Bluetooth specification.

7.10 48MHz RC Oscillator (RCOSC_HF)

Measured on the TI CC2640Q1EM-7ID reference design with T_c = 25°C, V_{DDS} = 3.0V, unless otherwise noted.

PARAMETER	TEST CONDITIONS	MIN	TYP	MAX	UNIT
Frequency			48		MHz
Uncalibrated frequency accuracy			±1%		
Calibrated frequency accuracy[1]			±0.25%		
Start-up time			5		µs

(1) Accuracy relative to the calibration source (XOSC_HF).

7.11 32kHz RC Oscillator (RCOSC_LF)

Measured on the TI CC2640Q1EM-7ID reference design with T_c = 25°C, V_{DDS} = 3.0V, unless otherwise noted.

PARAMETER	TEST CONDITIONS	MIN	TYP	MAX	UNIT
Calibrated frequency[1]			32.8		kHz
Temperature coefficient			50		ppm/°C

(1) The frequency accuracy of the real time clock (RTC) is not directly dependent on the frequency accuracy of the 32kHz RC oscillator. The RTC can be calibrated by measuring the frequency error of RCOSC_LF relative to XOSC_HF and compensating the RTC tick speed.

7.12 ADC Characteristics

T_c = 25°C, V_{DDS} = 3.0V without internal DC/DC converter and with voltage scaling enabled, unless otherwise noted.[1]

PARAMETER		TEST CONDITIONS	MIN	TYP	MAX	UNIT
	Input voltage range		0		VDDS	V
	Resolution			12		Bits
	Sample rate				200	ksps
	Offset	Internal 4.3V equivalent reference[2]		2		LSB
	Gain error	Internal 4.3V equivalent reference[2]		2.4		LSB
DNL[3]	Differential nonlinearity			> – 1		LSB
INL[4]	Integral nonlinearity			±3		LSB
ENOB	Effective number of bits	Internal 4.3V equivalent reference[2], 200ksps, 9.6kHz input tone		9.8		Bits
		VDDS as reference, 200ksps, 9.6kHz input tone		10		
		Internal 1.44V reference, voltage scaling disabled, 32 samples average, 200ksps, 300Hz input tone		11.1		
THD	Total harmonic distortion	Internal 4.3V equivalent reference[2], 200ksps, 9.6kHz input tone		– 65		dB
		VDDS as reference, 200ksps, 9.6kHz input tone		– 69		
		Internal 1.44V reference, voltage scaling disabled, 32 samples average, 200ksps, 300Hz input tone		– 71		
SINAD, SNDR	Signal-to-noise and Distortion ratio	Internal 4.3V equivalent reference[2], 200ksps, 9.6kHz input tone		60		dB
		VDDS as reference, 200ksps, 9.6kHz input tone		63		
		Internal 1.44V reference, voltage scaling disabled, 32 samples average, 200ksps, 300Hz input tone		69		
SFDR	Spurious-free dynamic range	Internal 4.3V equivalent reference[2], 200ksps, 9.6kHz input tone		67		dB
		VDDS as reference, 200ksps, 9.6kHz input tone		72		
		Internal 1.44V reference, voltage scaling disabled, 32 samples average, 200ksps, 300Hz input tone		73		

Copyright © 2025 Texas Instruments Incorporated

T_c = 25°C, V_{DDS} = 3.0V without internal DC/DC converter and with voltage scaling enabled, unless otherwise noted.(1)

PARAMETER	TEST CONDITIONS	MIN	TYP	MAX	UNIT
Conversion time	Serial conversion, time-to-output, 24MHz clock		50		clock-cycles
Current consumption	Internal 4.3V equivalent reference(2)		0.66		mA
Current consumption	VDDS as reference		0.75		mA
Reference voltage	Equivalent fixed internal reference (input voltage scaling enabled). For best accuracy, the ADC conversion should be initiated through the TI-RTOS API to include the gain/offset compensation factors stored in FCFG1.		4.3(2) (5)		V
Reference voltage	Fixed internal reference (input-voltage scaling disabled). For the best accuracy, the ADC conversion should be initiated through the TI-RTOS API to include the gain/offset compensation factors stored in FCFG1. This value is derived from the scaled value (4.3V) as follows. V_{ref} = 4.3V × 1408 / 4095		1.48		V
Reference voltage	VDDS as reference (also known as *RELATIVE*) (input voltage scaling enabled)		VDDS		V
Reference voltage	VDDS as reference (also known as *RELATIVE*) (input voltage scaling disabled)		VDDS / 2.82(5)		V
Input Impedance	200ksps, voltage scaling enabled. Capacitive input, input impedance depends on sampling frequency and sampling time		>1		MΩ

(1) Using IEEE Std 1241™-2010 for terminology and test methods.
(2) Input signal scaled down internally before conversion, as if voltage range was 0V to 4.3V.
(3) No missing codes. Positive DNL typically varies from +0.3 to +3.5, depending on the device (see 图 7-21).
(4) For a typical example, see 图 7-22.
(5) Applied voltage must be within absolute maximum ratings at all times (see 节 7.1).

7.13 Temperature Sensor

Measured on the TI CC2640Q1EM-7ID reference design with T_c = 25°C, V_{DDS} = 3.0V, unless otherwise noted.

PARAMETER	TEST CONDITIONS	MIN	TYP	MAX	UNIT
Resolution			4		°C
Range		–40		105	°C
Accuracy			±5		°C
Supply voltage coefficient(1)			3.2		°C/V

(1) Automatically compensated when using supplied driver libraries.

7.14 Battery Monitor

Measured on the TI CC2640Q1EM-7ID reference design with T_c = 25°C, V_{DDS} = 3.0V, unless otherwise noted.

PARAMETER	TEST CONDITIONS	MIN	TYP	MAX	UNIT
Resolution			50		mV
Range		1.8		3.8	V
Accuracy			13		mV

7.15 Continuous Time Comparator

T_c = 25°C, V_{DDS} = 3.0V, unless otherwise noted.

PARAMETER	TEST CONDITIONS	MIN	TYP	MAX	UNIT
Input voltage range		0		VDDS	V
External reference voltage		0		VDDS	V
Internal reference voltage	DCOUPL as reference		1.27		V

T_c = 25°C, V_{DDS} = 3.0V, unless otherwise noted.

PARAMETER	TEST CONDITIONS	MIN	TYP	MAX	UNIT
Offset			3		mV
Hysteresis			<2		mV
Decision time	Step from – 10mV to 10mV		0.72		µs
Current consumption when enabled[(1)]			8.6		µA

(1) Additionally, the bias module must be enabled when running in standby mode.

Copyright © 2025 Texas Instruments Incorporated

7.16 Low-Power Clocked Comparator

T_c = 25°C, V_{DDS} = 3.0V, unless otherwise noted.

PARAMETER	TEST CONDITIONS	MIN	TYP	MAX	UNIT
Input voltage range		0		VDDS	V
Clock frequency			32		kHz
Internal reference voltage, VDDS / 2			1.49 – 1.51		V
Internal reference voltage, VDDS / 3			1.01 – 1.03		V
Internal reference voltage, VDDS / 4			0.78 – 0.79		V
Internal reference voltage, DCOUPL / 1			1.25 – 1.28		V
Internal reference voltage, DCOUPL / 2			0.63 – 0.65		V
Internal reference voltage, DCOUPL / 3			0.42 – 0.44		V
Internal reference voltage, DCOUPL / 4			0.33 – 0.34		V
Offset			<2		mV
Hysteresis			<5		mV
Decision time	Step from – 50mV to 50mV		<1		clock-cycle
Current consumption when enabled			362		nA

7.17 Programmable Current Source

T_c = 25°C, V_{DDS} = 3.0V, unless otherwise noted.

PARAMETER	TEST CONDITIONS	MIN	TYP	MAX	UNIT
Current source programmable output range			0.25 – 20		µA
Resolution			0.25		µA
Current consumption(1)	Including current source at maximum programmable output		23		µA

(1) Additionally, the bias module must be enabled when running in standby mode.

7.18 Synchronous Serial Interface (SSI)

T_c = 25°C, V_{DDS} = 3.0V, unless otherwise noted.

PARAMETER	TEST CONDITIONS	MIN	TYP	MAX	UNIT
S1(1) t_{clk_per} (SSIClk period)	Device operating as SLAVE	12		65024	system clocks
S2(1) t_{clk_high} (SSIClk high time)	Device operating as SLAVE		0.5		t_{clk_per}
S3(1) t_{clk_low} (SSIClk low time)	Device operating as SLAVE		0.5		t_{clk_per}
S1 (TX only)(1) t_{clk_per} (SSIClk period)	One-way communication to SLAVE: Device operating as MASTER	4		65024	system clocks
S1 (TX and RX)(1) t_{clk_per} (SSIClk period)	Normal duplex operation: Device operating as MASTER	8		65024	system clocks
S2(1) t_{clk_high} (SSIClk high time)	Device operating as MASTER		0.5		t_{clk_per}
S3(1) t_{clk_low}(SSIClk low time)	Device operating as MASTER		0.5		t_{clk_per}

(1) Refer to SSI timing diagrams 图 7-1, 图 7-2, and 图 7-3.

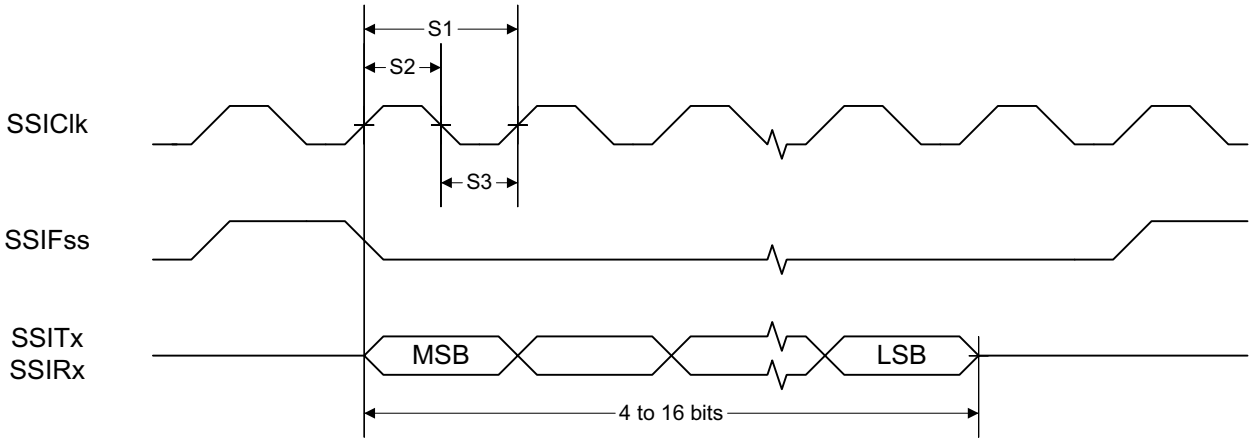

图 7-1. SSI Timing for TI Frame Format (FRF = 01), Single Transfer Timing Measurement

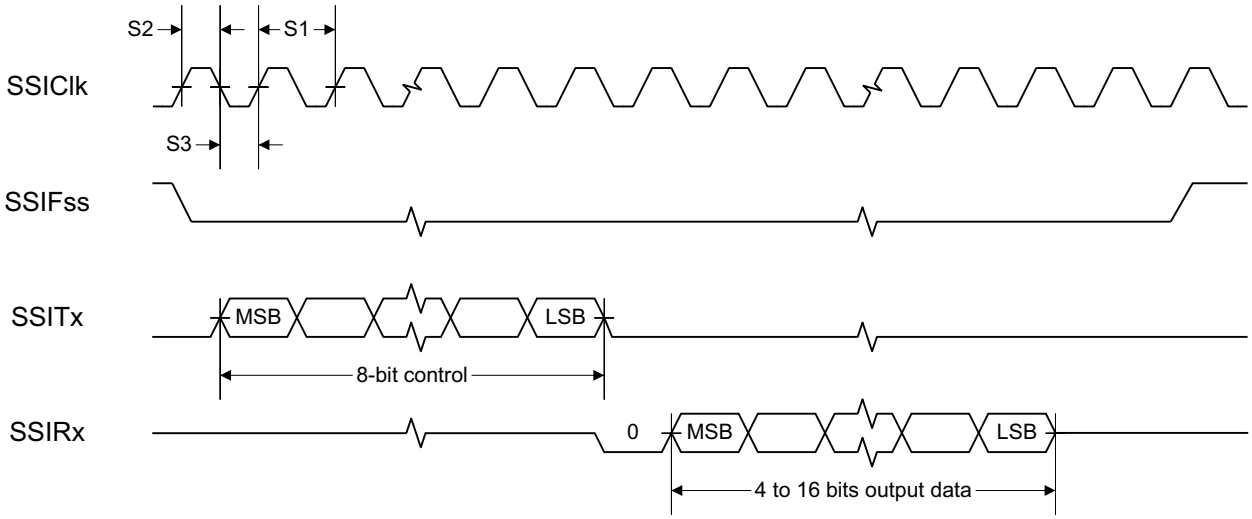

图 7-2. SSI Timing for MICROWIRE Frame Format (FRF = 10), Single Transfer

Copyright © 2025 Texas Instruments Incorporated

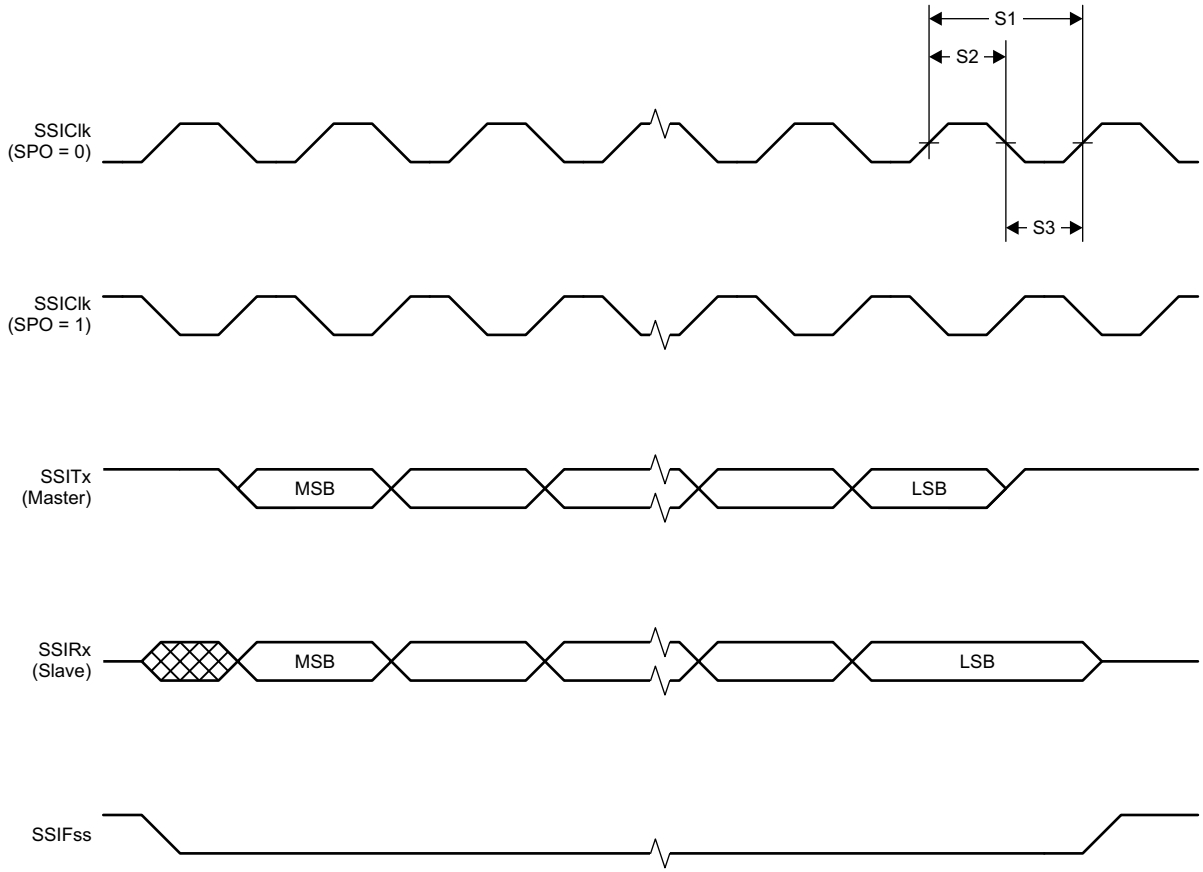

图 7-3. SSI Timing for SPI Frame Format (FRF = 00), With SPH = 1

7.19 DC Characteristics

PARAMETER	TEST CONDITIONS	MIN	TYP	MAX	UNIT
T_A = 25°C, V_{DDS} = 1.8V					
GPIO V_{OH} at 8mA load	IOCURR = 2, high-drive GPIOs only	1.32	1.54		V
GPIO V_{OL} at 8mA load	IOCURR = 2, high-drive GPIOs only		0.26	0.32	V
GPIO V_{OH} at 4mA load	IOCURR = 1	1.32	1.58		V
GPIO V_{OL} at 4mA load	IOCURR = 1		0.21	0.32	V
GPIO pullup current	Input mode, pullup enabled, $V_{(pad)}$ = 0V		71.7		µA
GPIO pulldown current	Input mode, pulldown enabled, $V_{(pad)}$ = VDDS		21.1		µA
GPIO high/low input transition, no hysteresis	I_H = 0, transition between reading 0 and reading 1		0.88		V
GPIO low-to-high input transition, with hysteresis	I_H = 1, transition voltage for input read as 0 → 1		1.07		V
GPIO high-to-low input transition, with hysteresis	I_H = 1, transition voltage for input read as 1 → 0		0.74		V
GPIO input hysteresis	I_H = 1, difference between 0 → 1 and 1 → 0 points		0.33		V

PARAMETER	TEST CONDITIONS	MIN	TYP	MAX	UNIT
T_A = 25°C, V_{DDS} = 3.0V					
GPIO V_{OH} at 8mA load	IOCURR = 2, high-drive GPIOs only		2.68		V
GPIO V_{OL} at 8mA load	IOCURR = 2, high-drive GPIOs only		0.33		V
GPIO V_{OH} at 4mA load	IOCURR = 1		2.72		V
GPIO V_{OL} at 4mA load	IOCURR = 1		0.28		V
T_A = 25°C, V_{DDS} = 3.8V					
GPIO pullup current	Input mode, pullup enabled, $V_{(pad)}$ = 0V		277		µA
GPIO pulldown current	Input mode, pulldown enabled, $V_{(pad)}$ = VDDS		113		µA
GPIO high/low input transition, no hysteresis	I_H = 0, transition between reading 0 and reading 1		1.67		V
GPIO low-to-high input transition, with hysteresis	I_H = 1, transition voltage for input read as 0 → 1		1.94		V
GPIO high-to-low input transition, with hysteresis	I_H = 1, transition voltage for input read as 1 → 0		1.54		V
GPIO input hysteresis	I_H = 1, difference between 0 → 1 and 1 → 0 points		0.4		V
T_A = 25°C					
$V_{(IH)}$	Lowest GPIO input voltage reliably interpreted as a «High»			0.8	VDDS(1)
$V_{(IL)}$	Highest GPIO input voltage reliably interpreted as a «Low»	0.2			VDDS(1)

(1) Each GPIO is referenced to a specific VDDS pin. See the technical reference manual listed in 节 10.3 for more details.

7.20 Thermal Resistance Characteristics for RGZ Package

over operating free-air temperature range (unless otherwise noted)

NAME	DESCRIPTION	(°C/W)(1) (2)
$R_{\theta JA}$	Junction-to-ambient thermal resistance	29.6
$R_{\theta JC(top)}$	Junction-to-case (top) thermal resistance	15.7
$R_{\theta JB}$	Junction-to-board thermal resistance	6.2
Psi_{JT}	Junction-to-top characterization parameter	0.3
Psi_{JB}	Junction-to-board characterization parameter	6.2
$R_{\theta JC(bot)}$	Junction-to-case (bottom) thermal resistance	1.9

(1) °C/W = degrees Celsius per watt.
(2) These values are based on a JEDEC-defined 2S2P system (with the exception of the Theta JC [$R_{\theta JC}$] value, which is based on a JEDEC-defined 1S0P system) and will change based on the environment as well as application. For more information, see the following EIA/JEDEC standards:

- JESD51-2, *Integrated Circuits Thermal Test Method Environmental Conditions - Natural Convection (Still Air)*
- JESD51-3, *Low Effective Thermal Conductivity Test Board for Leaded Surface Mount Packages*
- JESD51-7, *High Effective Thermal Conductivity Test Board for Leaded Surface Mount Packages*
- JESD51-9, *Test Boards for Area Array Surface Mount Package Thermal Measurements*

Power dissipation of 2W and an ambient temperature of 70°C is assumed.

Copyright © 2025 Texas Instruments Incorporated

7.21 Timing Requirements

		MIN	NOM	MAX	UNIT
Rising supply-voltage slew rate		0		100	mV/µs
Falling supply-voltage slew rate		0		20	mV/µs
Falling supply-voltage slew rate, with low-power flash settings(1)				3	mV/µs
Positive temperature gradient in standby(3)	No limitation for negative temperature gradient, or outside standby mode			5	°C/s
CONTROL INPUT AC CHARACTERISTICS(2)					
RESET_N low duration		1			µs

(1) For smaller coin cell batteries, with high worst-case end-of-life equivalent source resistance, a 22µF VDDS input capacitor (see 图 9-1) must be used to ensure compliance with this slew rate.
(2) T_A = –40°C to +105°C, V_{DDS} = 1.8V to 3.8V, unless otherwise noted.
(3) Applications using RCOSC_LF as a sleep timer must also consider the drift in frequency caused by a change in temperature. See 节 7.11

7.22 Switching Characteristics

Measured on the TI CC2640Q1EM-7ID reference design with T_c = 25°C, V_{DDS} = 3.0V, unless otherwise noted.

PARAMETER	TEST CONDITIONS	MIN	TYP	MAX	UNIT
WAKEUP and TIMING					
Idle → Active			14		µs
Standby → Active			151		µs
Shutdown → Active			1015		µs

7.23 Typical Characteristics

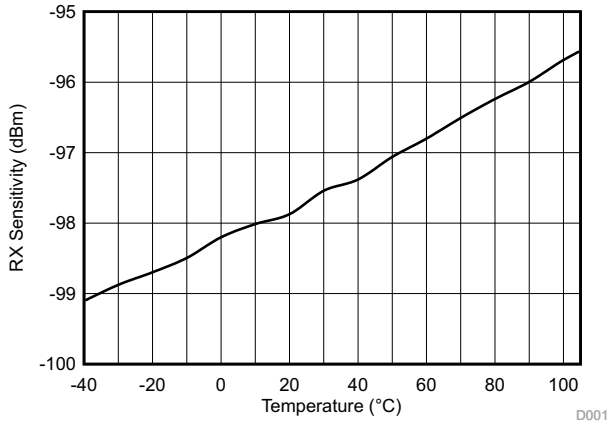

图 7-4. Bluetooth Low Energy Sensitivity vs Temperature

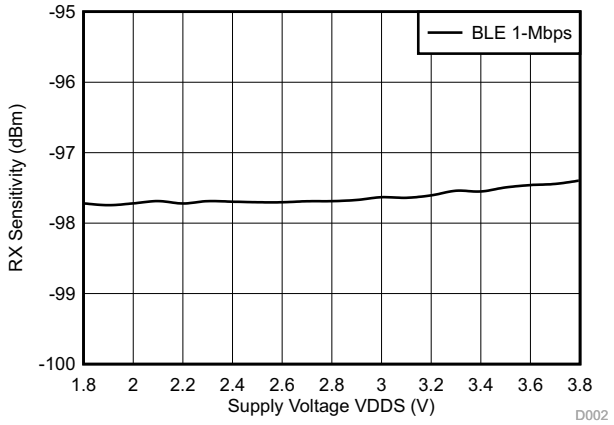

图 7-5. Bluetooth Low Energy Sensitivity vs Supply Voltage (VDDS)

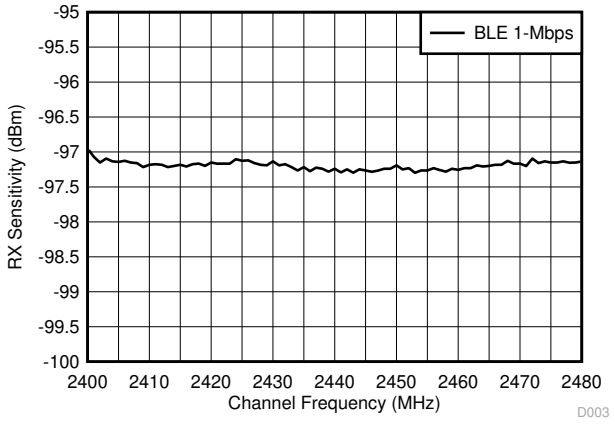

图 7-6. Bluetooth Low Energy Sensitivity vs Channel Frequency

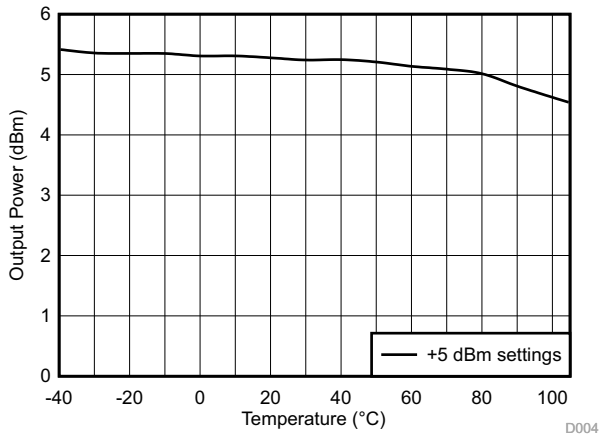

图 7-7. TX Output Power vs Temperature

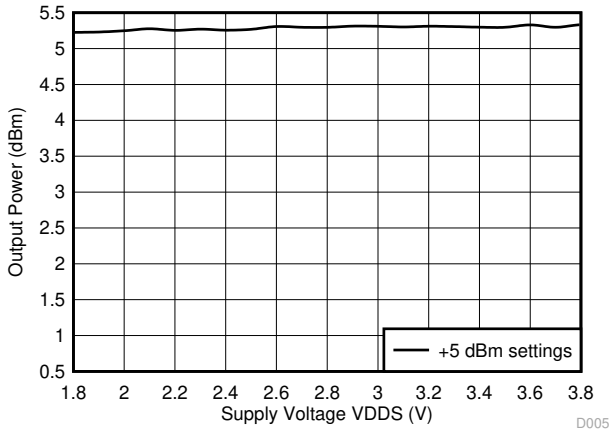

图 7-8. TX Output Power vs Supply Voltage (VDDS)

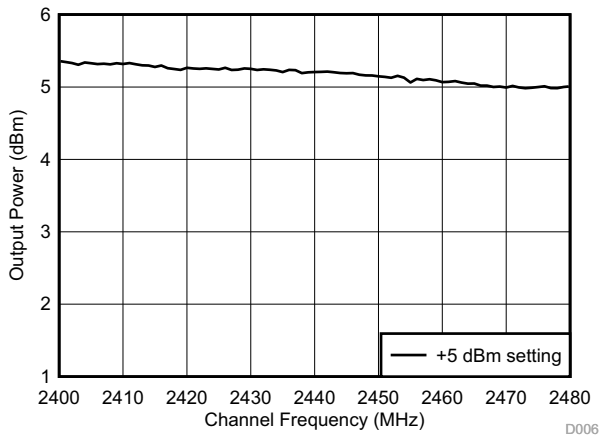

图 7-9. TX Output Power vs Channel Frequency

Copyright © 2025 Texas Instruments Incorporated

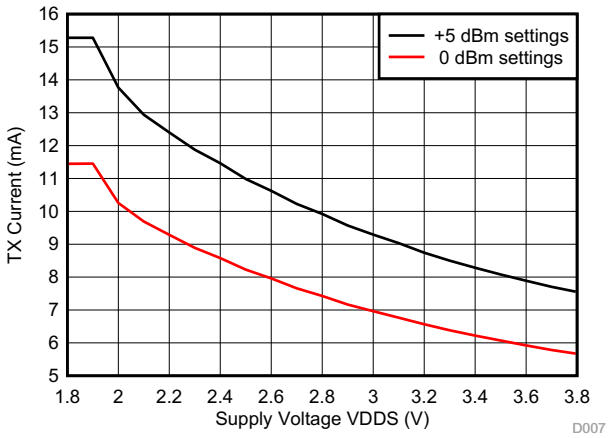

图 7-10. TX Current Consumption vs Supply Voltage (VDDS)

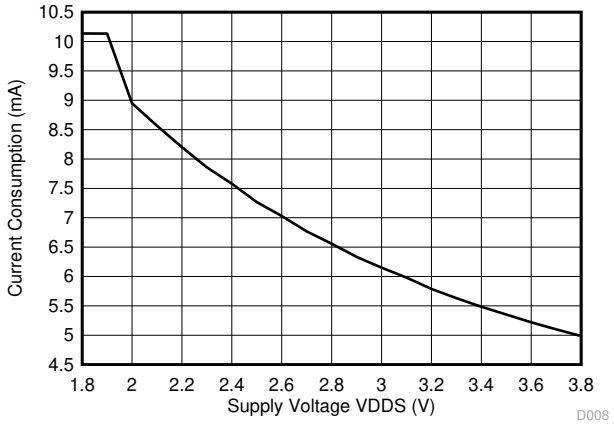

图 7-11. RX Mode Current vs Supply Voltage (VDDS)

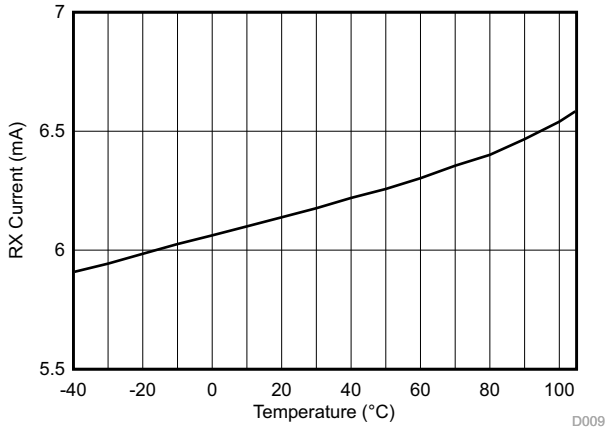

图 7-12. RX Mode Current Consumption vs Temperature

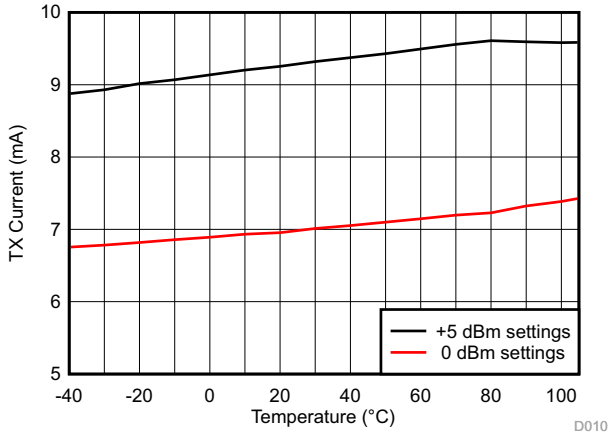

图 7-13. TX Mode Current Consumption vs Temperature

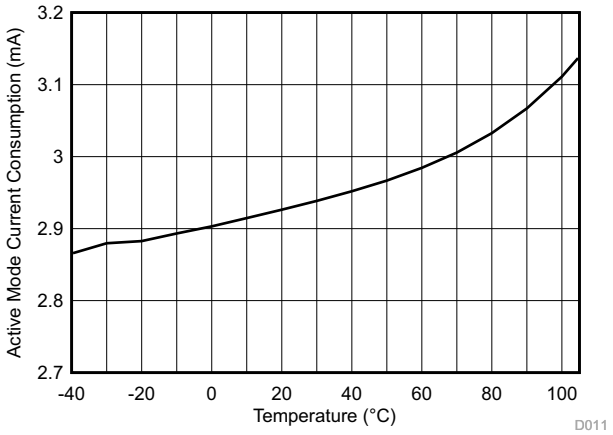

图 7-14. Active Mode (MCU Running, No Peripherals) Current Consumption vs Temperature

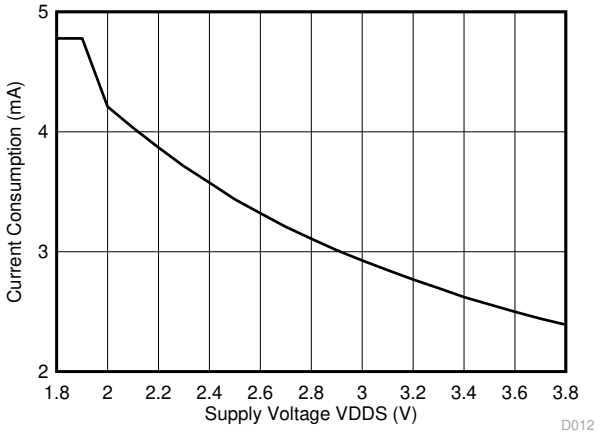

图 7-15. Active Mode (MCU Running, No Peripherals) Current Consumption vs Supply Voltage (VDDS)

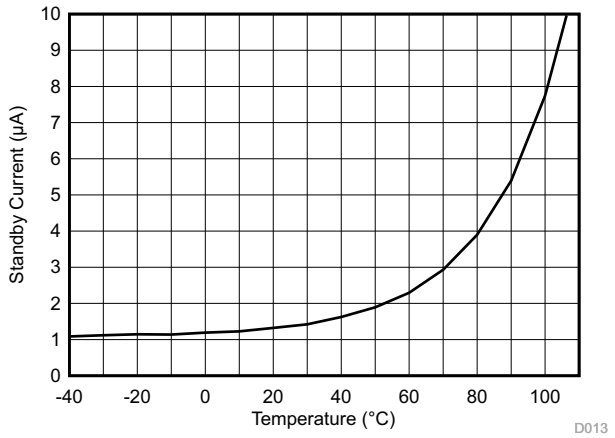

图 7-16. Standby Mode Current Consumption vs Temperature

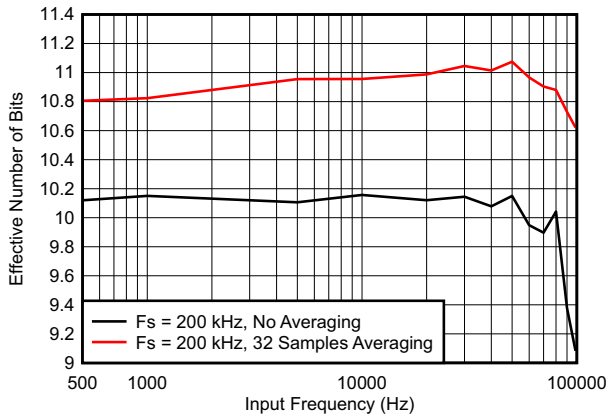

图 7-17. SoC ADC Effective Number of Bits vs Input Frequency (Internal Reference, No Scaling)

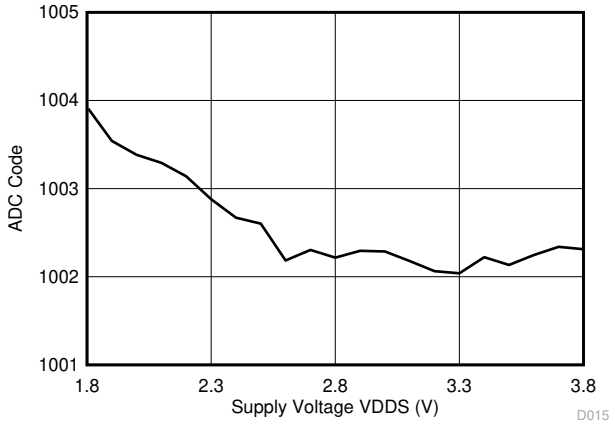

图 7-18. SoC ADC Output vs Supply Voltage (Fixed Input, Internal Reference, No Scaling)

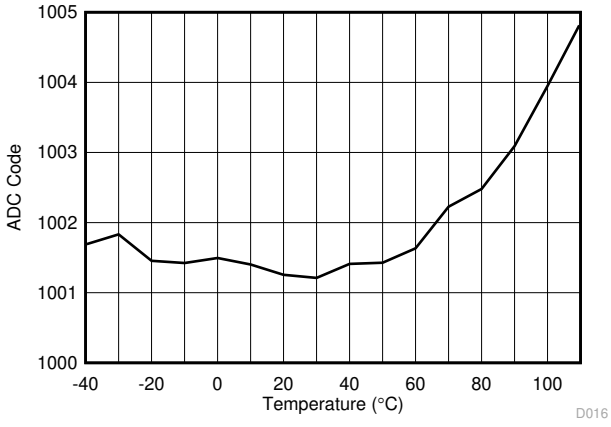

图 7-19. SoC ADC Output vs Temperature (Fixed Input, Internal Reference, No Scaling)

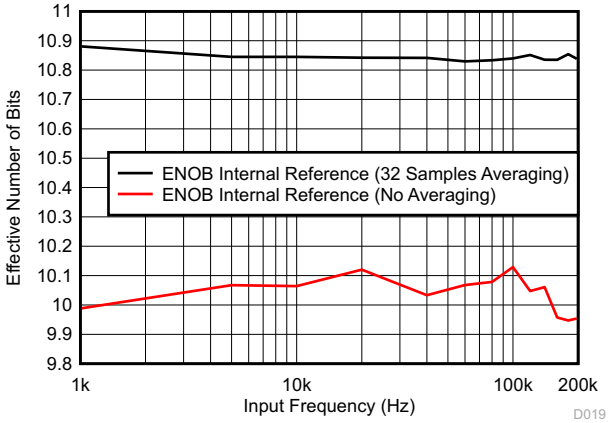

图 7-20. SoC ADC ENOB vs Sampling Frequency (Input Frequency = FS / 10)

Copyright © 2025 Texas Instruments Incorporated

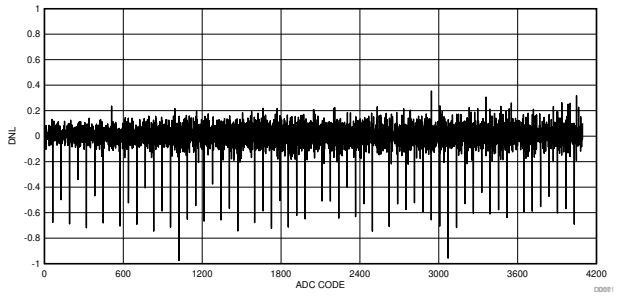

图 7-21. SoC ADC DNL vs ADC Code (Internal Reference, No Scaling)

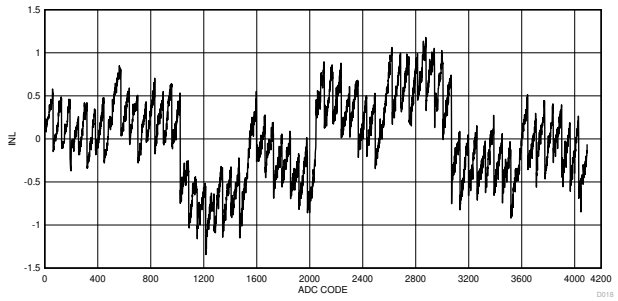

图 7-22. SoC ADC INL vs ADC Code (Internal Reference, No Scaling)

8 Detailed Description

8.1 Overview

节 4 shows the core modules of the CC26xx product family.

8.2 Main CPU

The automotive grade SimpleLink™ CC2640R2F-Q1 Wireless MCU contains an Arm® Cortex®-M3 (CM3) 32-bit CPU, which runs the application and the higher layers of the protocol stack.

The Cortex®-M3 processor provides a high-performance, low-cost platform that meets the system requirements of minimal memory implementation, and low-power consumption, while delivering outstanding computational performance and exceptional system response to interrupts.

Cortex-M3 features include the following:

- 32-bit Arm® Cortex®-M3 architecture optimized for small-footprint embedded applications
- Outstanding processing performance combined with fast interrupt handling
- Arm Thumb®-2 mixed 16- and 32-bit instruction set delivers the high performance expected of a 32-bit Arm core in a compact memory size usually associated with 8- and 16-bit devices, typically in the range of a few kilobytes of memory for microcontroller-class applications:
  - Single-cycle multiply instruction and hardware divide
  - Atomic bit manipulation (bit-banding), delivering maximum memory use and streamlined peripheral control
  - Unaligned data access, enabling data to be efficiently packed into memory
- Fast code execution permits slower processor clock or increases sleep mode time
- Harvard architecture characterized by separate buses for instruction and data
- Efficient processor core, system, and memories
- Hardware division and fast digital-signal-processing oriented multiply accumulate
- Saturating arithmetic for signal processing
- Deterministic, high-performance interrupt handling for time-critical applications
- Enhanced system debug with extensive breakpoint and trace capabilities
- Serial wire trace reduces the number of pins required for debugging and tracing
- Migration from the ARM7™ processor family for better performance and power efficiency
- Optimized for single-cycle flash memory use
- Ultra-low power consumption with integrated sleep modes
- 1.25 DMIPS per MHz

8.3 RF Core

The RF Core contains an Arm Cortex-M0 processor that interfaces the analog RF and base-band circuitries, handles data to and from the system side, and assembles the information bits in a given packet structure. The RF core offers a high-level, command-based API to the main CPU.

The RF core is capable of autonomously handling the time-critical aspects of the radio protocols (*Bluetooth* ® low energy), thus offloading the main CPU and leaving more resources for the user application.

The RF core has a dedicated 4KB SRAM block and runs initially from separate ROM memory. The Arm Cortex-M0 processor is not programmable by customers.

Copyright © 2025 Texas Instruments Incorporated

8.4 Sensor Controller

The Sensor Controller contains circuitry that can be selectively enabled in standby mode. The peripherals in this domain may be controlled by the Sensor Controller Engine, which is a proprietary power-optimized CPU. This CPU can read and monitor sensors or perform other tasks autonomously, thereby significantly reducing power consumption and offloading the main Cortex-M3 CPU.

The Sensor Controller is set up using a PC-based configuration tool, called Sensor Controller Studio, and potential use cases may be (but are not limited to):

- Analog sensors using integrated ADC
- Digital sensors using GPIOs, bit-banged I^2C, and SPI
- UART communication for sensor reading or debugging
- Capacitive sensing
- Waveform generation
- Pulse counting
- Keyboard scan
- Quadrature decoder for polling rotation sensors
- Oscillator calibration

备注

Texas Instruments provides application examples for some of these use cases, but not for all of them.

The peripherals in the Sensor Controller include the following:

- The low-power clocked comparator can be used to wake the device from any state in which the comparator is active. A configurable internal reference can be used in conjunction with the comparator. The output of the comparator can also be used to trigger an interrupt or the ADC.
- Capacitive sensing functionality is implemented through the use of a constant current source, a time-to-digital converter, and a comparator. The continuous time comparator in this block can also be used as a higher-accuracy alternative to the low-power clocked comparator. The Sensor Controller will take care of baseline tracking, hysteresis, filtering and other related functions.
- The ADC is a 12-bit, 200-ksamples/s ADC with eight inputs and a built-in voltage reference. The ADC can be triggered by many different sources, including timers, I/O pins, software, the analog comparator, and the RTC.
- The Sensor Controller also includes a SPI – I^2C digital interface.
- The analog modules can be connected to up to eight different GPIOs.

The peripherals in the Sensor Controller can also be controlled from the main application processor.

表 8-1. GPIOs Connected to the Sensor Controller (1)

ANALOG CAPABLE	7 × 7 RGZ DIO NUMBER
Y	30
Y	29
Y	28
Y	27
Y	26
Y	25
Y	24
Y	23
N	7
N	6
N	5
N	4
N	3
N	2
N	1
N	0

(1) Up to 16 pins can be connected to the Sensor Controller. Up to 8 of these pins can be connected to analog modules.

8.5 Memory

The flash memory provides nonvolatile storage for code and data. The flash memory is in-system programmable.

The SRAM (static RAM) can be used for both storage of data and execution of code and is split into two 4-KB blocks and two 6-KB blocks. Retention of the RAM contents in standby mode can be enabled or disabled individually for each block to minimize power consumption. In addition, if flash cache is disabled, the 8KB cache can be used as a general-purpose RAM.

The ROM provides preprogrammed embedded TI-RTOS kernel, Driver Library, and lower layer protocol stack software (*Bluetooth* ® low energy Controller). It also contains a bootloader that can be used to reprogram the device using SPI or UART.

8.6 Debug

The on-chip debug support is done through a dedicated cJTAG (IEEE 1149.7) or JTAG (IEEE 1149.1) interface.

Copyright © 2025 Texas Instruments Incorporated

8.7 Power Management

To minimize power consumption, the CC2640R2F-Q1 device supports a number of power modes and power management features (see 表 8-2).

表 8-2. Power Modes

MODE	SOFTWARE CONFIGURABLE POWER MODES				RESET PIN HELD
	ACTIVE	IDLE	STANDBY	SHUTDOWN	
CPU	Active	Off	Off	Off	Off
Flash	On	Available	Off	Off	Off
SRAM	On	On	On	Off	Off
Radio	Available	Available	Off	Off	Off
Supply System	On	On	Duty Cycled	Off	Off
Current	1.45 mA + 31 µA/MHz	650 µA	1.3 µA	0.15 µA	0.1 µA
Wake-up Time to CPU Active(1)	–	14 µs	151 µs	1015 µs	1015 µs
Register Retention	Full	Full	Partial	No	No
SRAM Retention	Full	Full	Full	No	No
High-Speed Clock	XOSC_HF or RCOSC_HF	XOSC_HF or RCOSC_HF	Off	Off	Off
Low-Speed Clock	XOSC_LF or RCOSC_LF	XOSC_LF or RCOSC_LF	XOSC_LF or RCOSC_LF	Off	Off
Peripherals	Available	Available	Off	Off	Off
Sensor Controller	Available	Available	Available	Off	Off
Wake up on RTC	Available	Available	Available	Off	Off
Wake up on Pin Edge	Available	Available	Available	Available	Off
Wake up on Reset Pin	Available	Available	Available	Available	Available
Brown Out Detector (BOD)	Active	Active	Duty Cycled	Off	N/A
Power On Reset (POR)	Active	Active	Active	Active	N/A

(1) Not including RTOS overhead

In active mode, the application Cortex-M3 CPU is actively executing code. Active mode provides normal operation of the processor and all of the peripherals that are currently enabled. The system clock can be any available clock source (see 表 8-2).

In idle mode, all active peripherals can be clocked, but the Application CPU core and memory are not clocked and no code is executed. Any interrupt event will bring the processor back into active mode.

In standby mode, only the always-on domain (AON) is active. An external wake event, RTC event, or sensor-controller event is required to bring the device back to active mode. MCU peripherals with retention do not need to be reconfigured when waking up again, and the CPU continues execution from where it went into standby mode. All GPIOs are latched in standby mode.

In shutdown mode, the device is turned off entirely, including the AON domain and the Sensor Controller. The I/Os are latched with the value they had before entering shutdown mode. A change of state on any I/O pin defined as a *wake from Shutdown pin* wakes up the device and functions as a reset trigger. The CPU can differentiate between a reset in this way, a reset-by-reset pin, or a power-on-reset by reading the reset status register. The only state retained in this mode is the latched I/O state and the Flash memory contents.

The Sensor Controller is an autonomous processor that can control the peripherals in the Sensor Controller independently of the main CPU, which means that the main CPU does not have to wake up, for example, to execute an ADC sample or poll a digital sensor over SPI. The main CPU saves both current and wake-up time that would otherwise be wasted. The Sensor Controller Studio enables the user to configure the sensor controller and choose which peripherals are controlled and which conditions wake up the main CPU.

8.8 Clock Systems

The CC2640R2F-Q1 device supports two external and two internal clock sources.

A 24MHz crystal is required as the frequency reference for the radio. This signal is doubled internally to create a 48MHz clock.

The 32kHz crystal is optional. *Bluetooth* ® low energy requires a slow-speed clock with better than ±500 ppm accuracy if the device is to enter any sleep mode while maintaining a connection. The internal 32kHz RC oscillator can, in some use cases, be compensated to meet the requirements. The low-speed crystal oscillator is designed for use with a 32kHz watch-type crystal.

The internal high-speed oscillator (48MHz) can be used as a clock source for the CPU subsystem.

The internal low-speed oscillator (32.768kHz) can be used as a reference if the low-power crystal oscillator is not used.

The 32kHz clock source can be used as an external clocking reference through GPIO.

8.9 General Peripherals and Modules

The I/O controller controls the digital I/O pins and contains multiplexer circuitry to allow a set of peripherals to be assigned to I/O pins in a flexible manner. All digital I/Os are interrupt and wake-up capable, have a programmable pullup and pulldown function and can generate an interrupt on a negative or positive edge (configurable). When configured as an output, pins can function as either push-pull or open-drain. Five GPIOs have high drive capabilities (marked in **bold** in 节 6).

The SSIs are synchronous serial interfaces that are compatible with SPI, MICROWIRE, and synchronous serial interfaces from Texas Instruments™. The SSIs support both SPI master and slave up to 4 MHz.

The UART implements a universal asynchronous receiver/transmitter function. It supports flexible baud-rate generation up to a maximum of 3 Mbps and is compatible with the *Bluetooth* ® HCI specifications.

Timer 0 is a general-purpose timer module (GPTM), which provides two 16-bit timers. The GPTM can be configured to operate as a single 32-bit timer, dual 16-bit timers or as a PWM module.

Timer 1, Timer 2, and Timer 3 are also GPTMs. Each of these timers is functionally equivalent to Timer 0.

In addition to these four timers, the RF core has its own timer to handle timing for RF protocols; the RF timer can be synchronized to the RTC.

The I^2C interface is used to communicate with devices compatible with the I^2C standard. The I^2C interface is capable of 100kHz and 400kHz operation, and can serve as both I^2C master and I^2C slave.

The TRNG module provides a true, nondeterministic noise source for the purpose of generating keys, initialization vectors (IVs), and other random number requirements. The TRNG is built on 24 ring oscillators that create unpredictable output to feed a complex nonlinear combinatorial circuit.

The watchdog timer is used to regain control if the system fails due to a software error after an external device fails to respond as expected. The watchdog timer can generate an interrupt or a reset when a predefined time-out value is reached.

Copyright © 2025 Texas Instruments Incorporated

The device includes a direct memory access (µDMA) controller. The µDMA controller provides a way to offload data transfer tasks from the Cortex-M3 CPU, allowing for more efficient use of the processor and the available bus bandwidth. The µDMA controller can perform transfer between memory and peripherals. The µDMA controller has dedicated channels for each supported on-chip module and can be programmed to automatically perform transfers between peripherals and memory as the peripheral is ready to transfer more data. Some features of the µDMA controller include the following (this is not an exhaustive list):

- Highly flexible and configurable channel operation of up to 32 channels
- Transfer modes:
  - Memory-to-memory
  - Memory-to-peripheral
  - Peripheral-to-memory
  - Peripheral-to-peripheral
- Data sizes of 8, 16, and 32 bits

The AON domain contains circuitry that is always enabled, except in Shutdown mode (where the digital supply is off). This circuitry includes the following:

- The RTC can be used to wake the device from any state where it is active. The RTC contains three compare and one capture registers. With software support, the RTC can be used for clock and calendar operation. The RTC is clocked from the 32kHz RC oscillator or crystal. The RTC can also be compensated to tick at the correct frequency even when the internal 32kHz RC oscillator is used instead of a crystal.
- The battery monitor and temperature sensor are accessible by software and give a battery status indication as well as a coarse temperature measure.

8.10 System Architecture

Depending on the product configuration, the CC2640R2F-Q1 device can function either as a wireless network processor (WNP—a device running the wireless protocol stack with the application running on a separate MCU), or as a system-on-chip (SoC), with the application and protocol stack running on the Arm Cortex-M3 core inside the device.

In the first case, the external host MCU communicates with the device using SPI or UART. In the second case, the application must be written according to the application framework supplied with the wireless protocol stack.

9 Application, Implementation, and Layout

备注

以下应用部分中的信息不属于 TI 器件规格的范围，TI 不担保其准确性和完整性。TI 的客 户应负责确定器件是否适用于其应用。客户应验证并测试其设计，以确保系统功能。

9.1 Application Information

Very few external components are required for the operation of the CC2640R2F-Q1 device. This section provides general information about the differential configuration when using the CC2640R2F-Q1 device in an application, and an example application circuit with schematics and layout is shown in 图 9-1, 图 9-2, 图 9-3, and 图 9-4. This is only a small selection of the many application circuit examples available as complete reference designs from the product folder on www.ti.com.

图 9-1 shows the differential RF front-end configuration option with internal biasing. See the CC2640Q1EM-7ID reference design for this option.

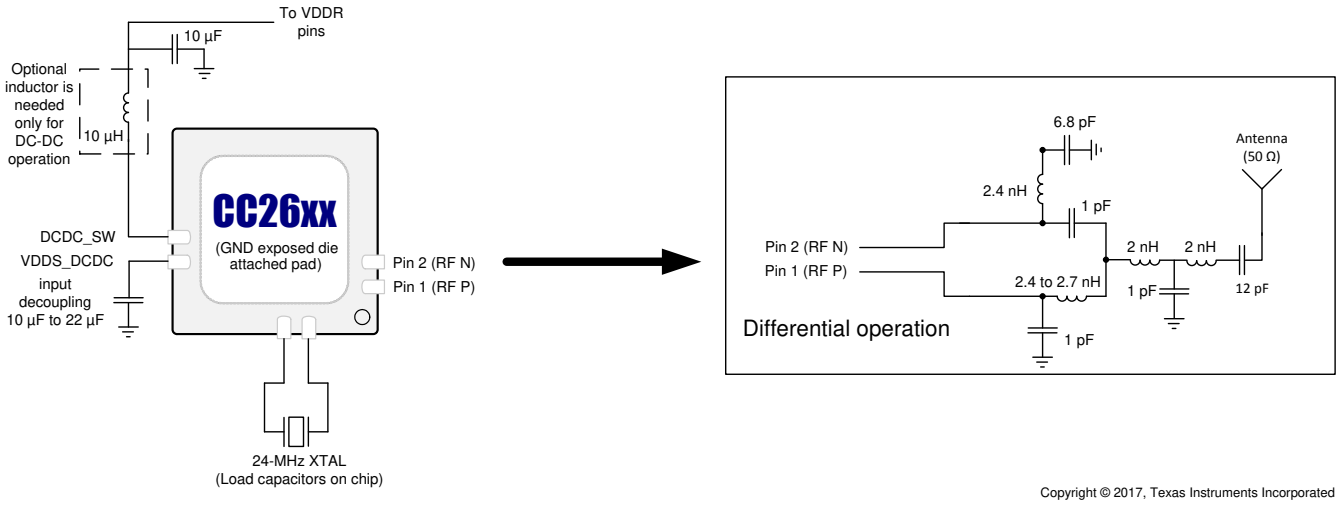

图 9-1. CC2640R2F-Q1 Application Circuit

Copyright © 2025 Texas Instruments Incorporated

图 9-2 shows the various supply voltage configuration options for the CC2640R2F-Q1 device. Not all power supply decoupling capacitors or digital I/Os are shown. For a detailed overview of power supply decoupling and wiring, see the TI reference designs and the *CC13x0, CC26x0 SimpleLink Wireless MCU Technical Reference Manual*.

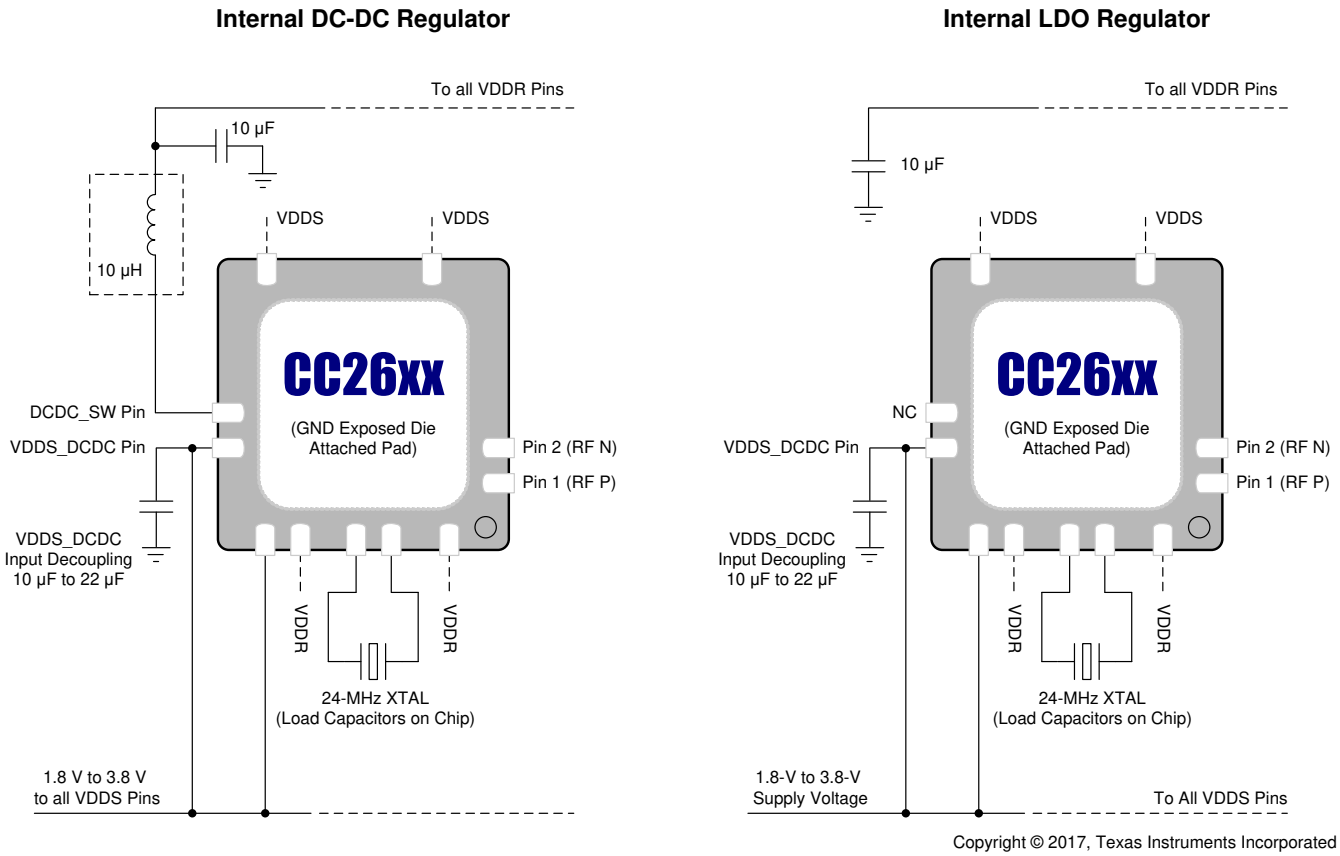

图 9-2. Supply Voltage Configurations

9.2 7 × 7 Internal Differential (7ID) Application Circuit

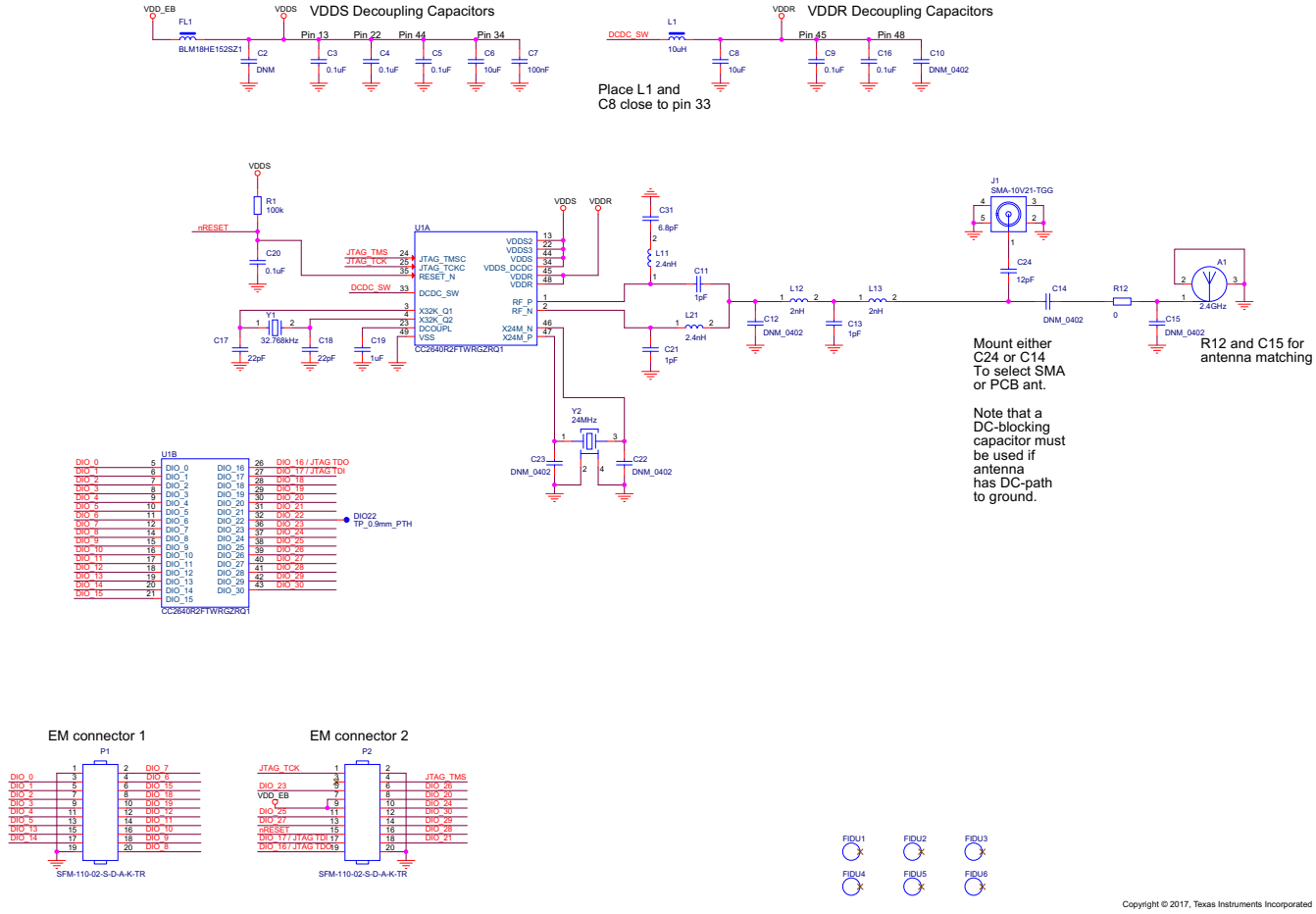

图 9-3. 7 × 7 Internal Differential (7ID) Application Circuit

9.2.1 Layout

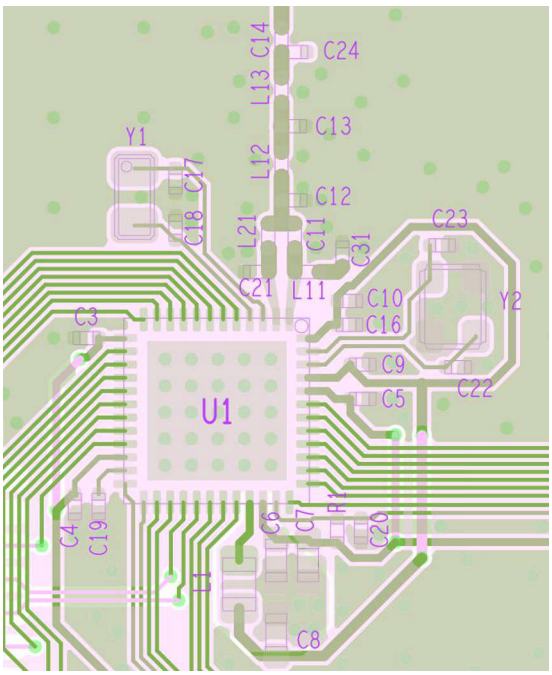

图 9-4. Layout

10 Device and Documentation Support

10.1 Device Nomenclature

To designate the stages in the product development cycle, TI assigns prefixes to all part numbers and date-code. Each device has one of three prefixes/identifications: X, P, or null (no prefix) (for example, CC2640R2F-Q1 is in production; therefore, no prefix/identification is assigned).

Device development evolutionary flow:

X Experimental device that is not necessarily representative of the final device's electrical specifications and may not use production assembly flow.

P Prototype device that is not necessarily the final silicon die and may not necessarily meet final electrical specifications.

null Production version of the silicon die that is fully qualified.

Production devices have been characterized fully, and the quality and reliability of the device have been demonstrated fully. TI's standard warranty applies.

Predictions show that prototype devices (X or P) have a greater failure rate than the standard production devices. Texas Instruments recommends that these devices not be used in any production system because their expected end-use failure rate still is undefined. Only qualified production devices are to be used.

TI device nomenclature also includes a suffix with the device family name. This suffix indicates the package type (for example, *RGZ*).

For orderable part numbers of the *CC2640R2F-Q1* device package types, see the Package Option Addendum of this document, the TI website (www.ti.com), or contact your TI sales representative.

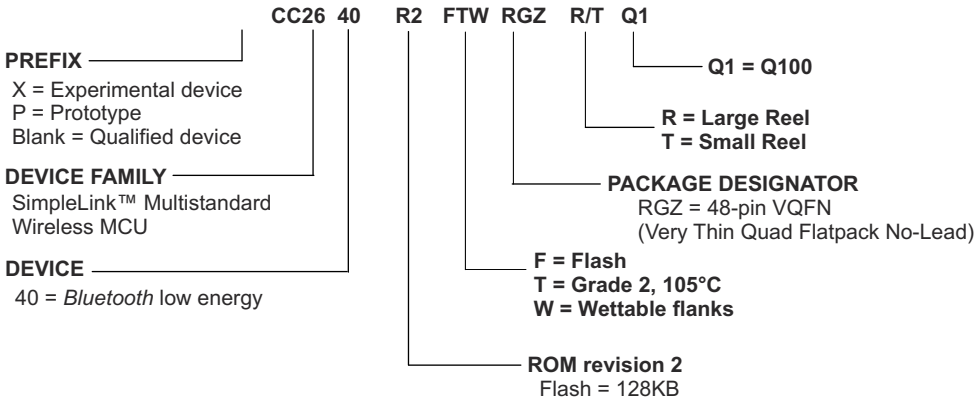

图 10-1. Device Nomenclature

Copyright © 2025 Texas Instruments Incorporated

10.2 Tools and Software

TI offers an extensive line of development tools, including tools to evaluate the performance of the processors, generate code, develop algorithm implementations, and fully integrate and debug software and hardware modules.

The following products support development of the CC2640R2F-Q1 device applications:

Software Tools:

SmartRF Studio 7 is a PC application that helps designers of radio systems to easily evaluate the RF-IC at an early stage in the design process.

- Test functions for sending and receiving radio packets, continuous wave transmit and receive
- Evaluate RF performance on custom boards by wiring it to a supported evaluation board or debugger
- Can also be used without any hardware, but then only to generate, edit and export radio configuration settings
- Can be used in combination with several development kits for TI's CCxxxx RF-ICs

Sensor Controller Studio provides a development environment for the CC26xx Sensor Controller. The Sensor Controller is a proprietary, power-optimized CPU in the CC26xx, which can perform simple background tasks autonomously and independent of the System CPU state.

- Allows for Sensor Controller task algorithms to be implemented using a C-like programming language
- Outputs a Sensor Controller Interface driver, which incorporates the generated Sensor Controller machine code and associated definitions
- Allows for rapid development by using the integrated Sensor Controller task testing and debugging functionality. This allows for live visualization of sensor data and algorithm verification.

IDEs and Compilers:

Code Composer Studio™ Integrated Development Environment (IDE):

- Integrated development environment with project management tools and editor
- Code Composer Studio (CCS) 6.1 and later has built-in support for the CC26xx device family
- Best support for XDS debuggers; XDS100v3, XDS110 and XDS200
- High integration with TI-RTOS with support for TI-RTOS Object View

IAR Embedded Workbench® for Arm®:

- Integrated development environment with project management tools and editor
- IAR EWARM 7.30.3 and later has built-in support for the CC26xx device family
- Broad debugger support, supporting XDS100v3, XDS200, IAR I-Jet and Segger J-Link
- Integrated development environment with project management tools and editor
- RTOS plugin available for TI-RTOS

For a complete listing of development-support tools for theCC2640R2F-Q1 platform, visit the Texas Instruments website at www.ti.com. For information on pricing and availability, contact the nearest TI field sales office or authorized distributor.

10.3 Documentation Support

To receive notification of documentation updates, navigate to the device product folder on ti.com (CC2640R2F-Q1). In the upper right corner, click on Alert me to register and receive a weekly digest of any product information that has changed. For change details, review the revision history included in any revised document.

The current documentation that describes the CC2640R2F-Q1 devices, related peripherals, and other technical collateral is listed in the following.

Technical Reference Manual

CC13x0, CC26x0 SimpleLink™ Wireless MCU Technical Reference Manual

Errata

CC2640R2F-Q1 SimpleLink™ Wireless MCU Errata

10.4 Texas Instruments Low-Power RF Website

Texas Instruments' Low-Power RF website has all the latest products, application and design notes, FAQ section, news and events updates. Go to www.ti.com/lprf.

10.5 支持资源

TI E2E™ 中文支持论坛是工程师的重要参考资料，可直接从专家处获得快速、经过验证的解答和设计帮助。搜索现有解答或提出自己的问题，获得所需的快速设计帮助。

链接的内容由各个贡献者“按原样”提供。这些内容并不构成 TI 技术规范，并且不一定反映 TI 的观点；请参阅 TI 的使用条款。

10.6 Trademarks

SimpleLink™, SmartRF™, Code Composer Studio™, 德州仪器 (TI)™, LaunchPad™, Texas Instruments™, and TI E2E™ are trademarks of Texas Instruments.
IEEE Std 1241™ is a trademark of Institute of Electrical and Electronics Engineers, Incorporated.
ARM7™ is a trademark of Arm Limited (or its subsidiaries).
Arm®, Cortex®, and Arm Thumb® are registered trademarks of Arm Limited (or its subsidiaries).
CoreMark® is a registered trademark of Embedded Microprocessor Benchmark Consortium.
低功耗蓝牙® is a registered trademark of Bluetooth SIG, Inc.
IAR Embedded Workbench® are registered trademarks of IAR Systems AB.
Zigbee® is a registered trademark of Zigbee Alliance.
所有商标均为其各自所有者的财产。

10.7 静电放电警告

静电放电 (ESD) 会损坏这个集成电路。德州仪器 (TI) 建议通过适当的预防措施处理所有集成电路。如果不遵守正确的处理和安装程序，可能会损坏集成电路。

ESD 的损坏小至导致微小的性能降级，大至整个器件故障。精密的集成电路可能更容易受到损坏，这是因为非常细微的参数更改都可能会导致器件与其发布的规格不相符。

10.8 Export Control Notice

Recipient agrees to not knowingly export or re-export, directly or indirectly, any product or technical data (as defined by the U.S., EU, and other Export Administration Regulations) including software, or any controlled product restricted by other applicable national regulations, received from disclosing party under nondisclosure obligations (if any), or any direct product of such technology, to any destination to which such export or re-export is restricted or prohibited by U.S. or other applicable laws, without obtaining prior authorization from U.S. Department of Commerce and other competent Government authorities to the extent required by those laws.

10.9 术语表

TI 术语表　　本术语表列出并解释了术语、首字母缩略词和定义。

Copyright © 2025 Texas Instruments Incorporated

11 Revision History

Changes from Revision B (October 2020) to Revision C (March 2025)	Page
• Added recommended GPIO Input Voltage in Recommended Operating Conditions	10

Changes from Revision A (August 2017) to Revision B (October 2020)	Page
• 更新了整个文档中的章节、表格、图和交叉参考的编号	1
• 更改了 节 1 中的开发工具和软件	1
• 更改了节 2	1
• 更改了节 3	2
• Added note to 节 7.1 about injection current and associated this note with the "Voltage on any digital pin" specification	10
• Removed the flash write time specification's association with note 2 in 节 7.5	11
• Added "Zero cycles" as the test condition for flash page/sector erase time in 节 7.5	11
• Added new flash page/sector erase time at 30 000 cycles in 节 7.5	11

12 Mechanical, Packaging, and Orderable Information

12.1 Packaging Information

The following pages include mechanical, packaging, and orderable information. This information is the most current data available for the designated devices. This data is subject to change without notice and revision of this document. For browser-based versions of this data sheet, refer to the left-hand navigation.

Copyright © 2025 Texas Instruments Incorporated

PACKAGE OUTLINE

RGZ0048N

VQFN - 1 mm max height

PLASTIC QUAD FLATPACK - NO LEAD

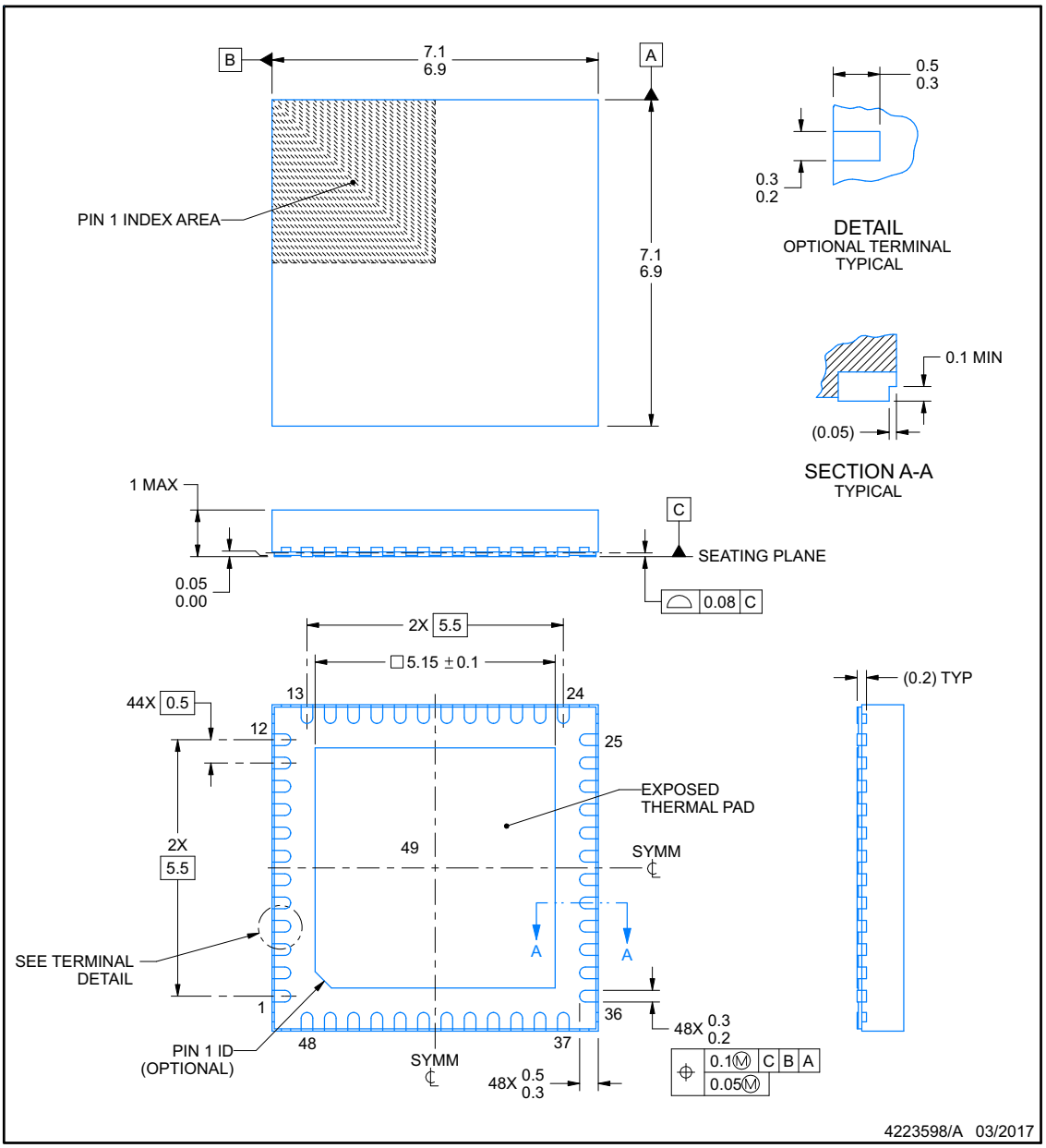

NOTES:

1. All linear dimensions are in millimeters. Any dimensions in parenthesis are for reference only. Dimensioning and tolerancing per ASME Y14.5M.
2. This drawing is subject to change without notice.
3. The package thermal pad must be soldered to the printed circuit board for thermal and mechanical performance.

Copyright © 2025 Texas Instruments Incorporated

EXAMPLE BOARD LAYOUT

RGZ0048N

VQFN - 1 mm max height

PLASTIC QUAD FLATPACK - NO LEAD

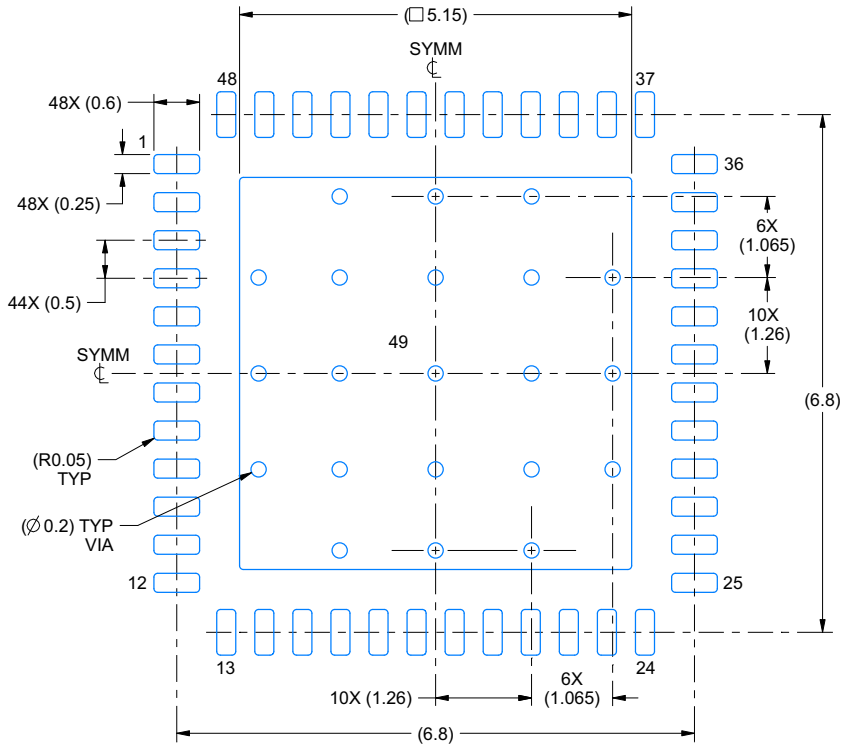

LAND PATTERN EXAMPLE
EXPOSED METAL SHOWN
SCALE:12X

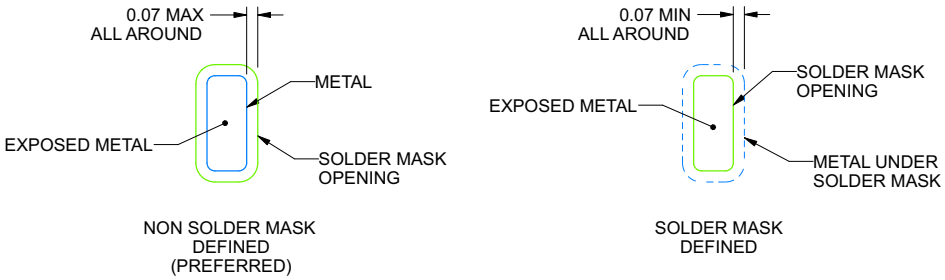

SOLDER MASK DETAILS

4223598/A 03/2017

NOTES: (continued)

4. This package is designed to be soldered to a thermal pad on the board. For more information, see Texas Instruments literature number SLUA271 (www.ti.com/lit/slua271).
5. Vias are optional depending on application, refer to device data sheet. If any vias are implemented, refer to their locations shown on this view. It is recommended that vias under paste be filled, plugged or tented.

Copyright © 2025 Texas Instruments Incorporated

EXAMPLE STENCIL DESIGN

RGZ0048N

VQFN - 1 mm max height

PLASTIC QUAD FLATPACK - NO LEAD

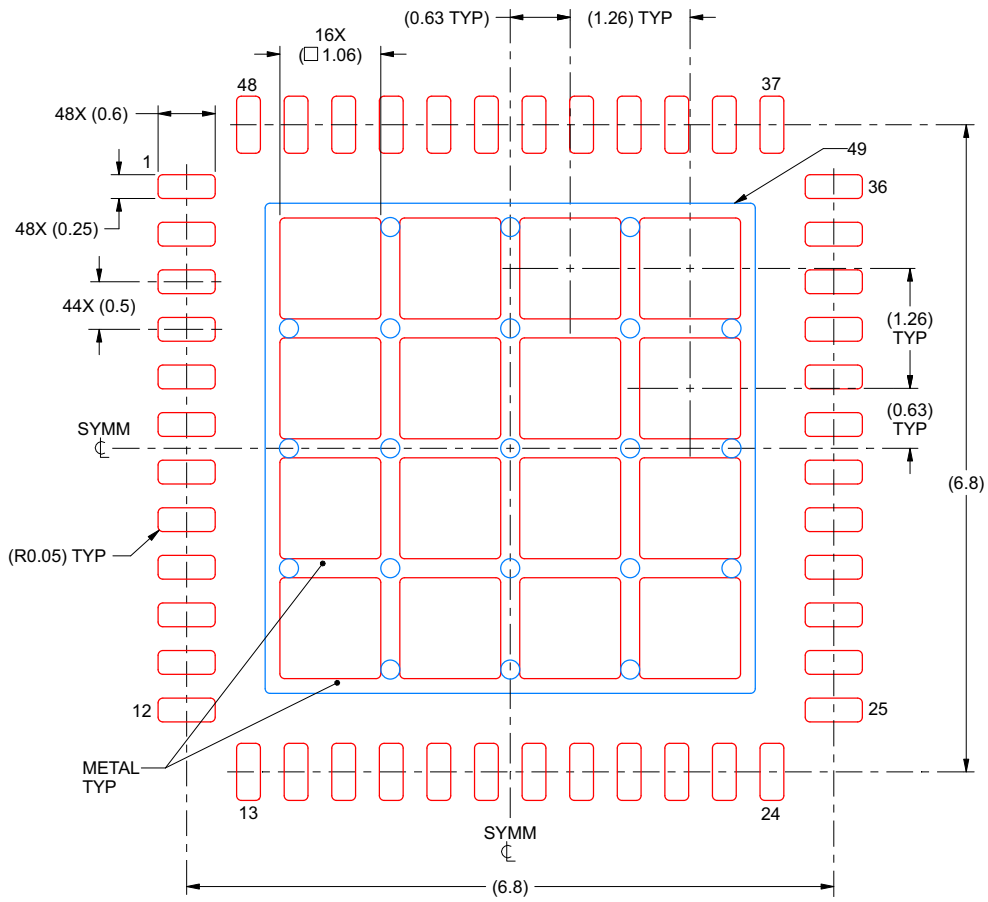

SOLDER PASTE EXAMPLE
BASED ON 0.125 mm THICK STENCIL

EXPOSED PAD 49
68% PRINTED SOLDER COVERAGE BY AREA UNDER PACKAGE
SCALE:15X

4223598/A 03/2017

NOTES: (continued)

6. Laser cutting apertures with trapezoidal walls and rounded corners may offer better paste release. IPC-7525 may have alternate design recommendations.

Copyright © 2025 Texas Instruments Incorporated

PACKAGING INFORMATION

Orderable part number	Status (1)	Material type (2)	Package | Pins	Package qty | Carrier	RoHS (3)	Lead finish/ Ball material (4)	MSL rating/ Peak reflow (5)	Op temp (°C)	Part marking (6)
CC2640R2FTWRGZRQ1	Active	Production	VQFN (RGZ) | 48	2500 | LARGE T&R	Yes	Call TI | Sn | Nipdau	Level-3-260C-168 HR	-40 to 105	CC2640Q1 R2F
CC2640R2FTWRGZRQ1.A	Active	Production	VQFN (RGZ) | 48	2500 | LARGE T&R	Yes	Call TI	Level-3-260C-168 HR	-40 to 105	CC2640Q1 R2F
CC2640R2FTWRGZRQ1.B	Active	Production	VQFN (RGZ) | 48	2500 | LARGE T&R	Yes	Call TI	Level-3-260C-168 HR	-40 to 105	CC2640Q1 R2F
CC2640R2FTWRGZTQ1	Active	Production	VQFN (RGZ) | 48	250 | SMALL T&R	Yes	Call TI | Sn	Level-3-260C-168 HR	-40 to 105	CC2640Q1 R2F
CC2640R2FTWRGZTQ1.A	Active	Production	VQFN (RGZ) | 48	250 | SMALL T&R	Yes	Call TI	Level-3-260C-168 HR	-40 to 105	CC2640Q1 R2F
CC2640R2FTWRGZTQ1.B	Active	Production	VQFN (RGZ) | 48	250 | SMALL T&R	Yes	Call TI	Level-3-260C-168 HR	-40 to 105	CC2640Q1 R2F

(1) **Status:** For more details on status, see our product life cycle.

(2) **Material type:** When designated, preproduction parts are prototypes/experimental devices, and are not yet approved or released for full production. Testing and final process, including without limitation quality assurance, reliability performance testing, and/or process qualification, may not yet be complete, and this item is subject to further changes or possible discontinuation. If available for ordering, purchases will be subject to an additional waiver at checkout, and are intended for early internal evaluation purposes only. These items are sold without warranties of any kind.

(3) **RoHS values:** Yes, No, RoHS Exempt. See the TI RoHS Statement for additional information and value definition.

(4) **Lead finish/Ball material:** Parts may have multiple material finish options. Finish options are separated by a vertical ruled line. Lead finish/Ball material values may wrap to two lines if the finish value exceeds the maximum column width.

(5) **MSL rating/Peak reflow:** The moisture sensitivity level ratings and peak solder (reflow) temperatures. In the event that a part has multiple moisture sensitivity ratings, only the lowest level per JEDEC standards is shown. Refer to the shipping label for the actual reflow temperature that will be used to mount the part to the printed circuit board.

(6) **Part marking:** There may be an additional marking, which relates to the logo, the lot trace code information, or the environmental category of the part.

Multiple part markings will be inside parentheses. Only one part marking contained in parentheses and separated by a "~" will appear on a part. If a line is indented then it is a continuation of the previous line and the two combined represent the entire part marking for that device.

Important Information and Disclaimer: The information provided on this page represents TI's knowledge and belief as of the date that it is provided. TI bases its knowledge and belief on information provided by third parties, and makes no representation or warranty as to the accuracy of such information. Efforts are underway to better integrate information from third parties. TI has taken and continues to take reasonable steps to provide representative and accurate information but may not have conducted destructive testing or chemical analysis on incoming materials and chemicals. TI and TI suppliers consider certain information to be proprietary, and thus CAS numbers and other limited information may not be available for release.

In no event shall TI's liability arising out of such information exceed the total purchase price of the TI part(s) at issue in this document sold by TI to Customer on an annual basis.

OTHER QUALIFIED VERSIONS OF CC2640R2F-Q1 :

- Catalog : CC2640R2F

NOTE: Qualified Version Definitions:

- Catalog - TI's standard catalog product

重要通知和免责声明

TI“按原样”提供技术和可靠性数据（包括数据表）、设计资源（包括参考设计）、应用或其他设计建议、网络工具、安全信息和其他资源，不保证没有瑕疵且不做出任何明示或暗示的担保，包括但不限于对适销性、与某特定用途的适用性或不侵犯任何第三方知识产权的暗示担保。

这些资源可供使用 TI 产品进行设计的熟练开发人员使用。您将自行承担以下全部责任：(1) 针对您的应用选择合适的 TI 产品，(2) 设计、验证并测试您的应用，(3) 确保您的应用满足相应标准以及任何其他安全、安保法规或其他要求。

这些资源如有变更，恕不另行通知。TI 授权您仅可将这些资源用于研发本资源所述的 TI 产品的相关应用。严禁以其他方式对这些资源进行复制或展示。您无权使用任何其他 TI 知识产权或任何第三方知识产权。对于因您对这些资源的使用而对 TI 及其代表造成的任何索赔、损害、成本、损失和债务，您将全额赔偿，TI 对此概不负责。

TI 提供的产品受 TI 销售条款)、TI 通用质量指南 或 ti.com 上其他适用条款或 TI 产品随附的其他适用条款的约束。TI 提供这些资源并不会扩展或以其他方式更改 TI 针对 TI 产品发布的适用的担保或担保免责声明。 除非德州仪器 (TI) 明确将某产品指定为定制产品或客户特定产品，否则其产品均为按确定价格收入目录的标准通用器件。

TI 反对并拒绝您可能提出的任何其他或不同的条款。

版权所有 © 2026，德州仪器 (TI) 公司

最后更新日期：2025 年 10 月