DRV5015低电压高灵敏度数字锁存器霍尔效应传感器

1 特性

- 数字锁存器霍尔效应传感器
- 高磁性灵敏度：
  - DRV5015A1：±0.7mT（典型值）
  - DRV5015A2：±1.8mT（典型值）
  - DRV5015A3：±1.8mT（反相，典型值）
- 集成迟滞
- 30kHz 高速感应带宽
- 2.5V 至 5.5V 工作 V_{CC} 范围
- 开漏输出，输出电流高达 20mA
- 运行温度范围：–40°C 至 +125°C

2 应用

- 无刷直流电机传感器
- 增量旋转编码：
  - 刷式直流电机反馈
  - 电机速度（转速计）
  - 机械行程
  - 流体测量
  - 人机界面旋钮
  - 轮速
- 电动自行车

3 说明

DRV5015 是一款低电压数字锁存器霍尔效应传感器，专为高速和高温电机 应用。该器件由 2.5V 至 5.5V 的电源供电，可以检测磁通量密度并根据预定义的磁性阈值显示数字输出。

必须交换北极和南极磁极才能切换输出，集成的磁滞能够提供稳定可靠的切换。

该器件具有两个磁性阈值选项和一个反相输出选项。高磁性灵敏度可提供低成本磁体选择和组件放置灵活性。

该器件在 –40°C 至 +125°C 的宽环境温度范围内能够保持稳定一致的优异性能。

器件信息(1)

器件型号	封装	封装尺寸（标称值）
DRV5015	SOT-23 (3)	2.92mm × 1.30mm

(1) 如需了解所有可用封装，请参阅数据表末尾的封装选项附录。

典型原理图

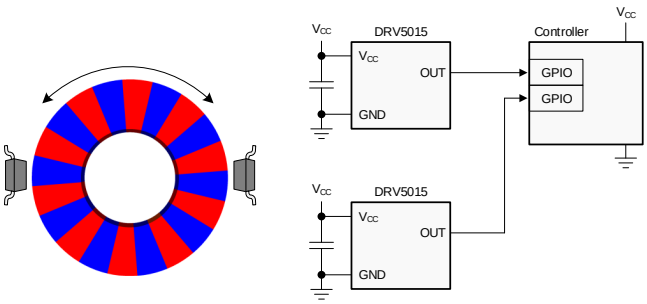

磁响应

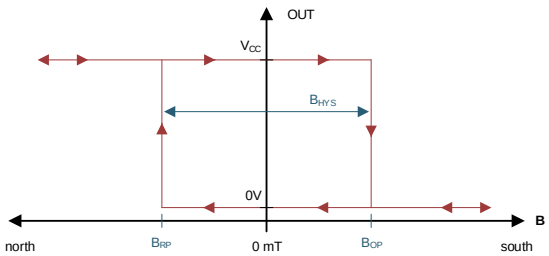

DRV5015A1, DRV5015A2

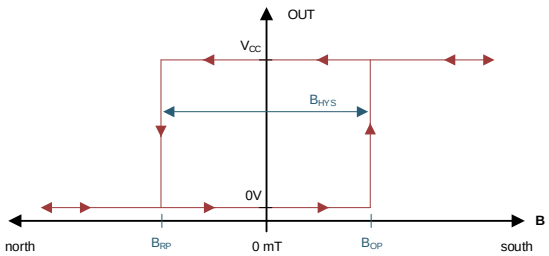

DRV5015A3

本文档旨在为方便起见，提供有关 TI 产品中文版本的信息，以确认产品的概要。 有关适用的官方英文版本的最新信息，请访问 www.ti.com，其内容始终优先。 TI 不保证翻译的准确性和有效性。 在实际设计之前，请务必参考最新版本的英文版本。

目录

1 特性 ... 1
2 应用 ... 1
3 说明 ... 1
4 修订历史记录 ... 2
5 **Pin Configuration and Functions** ... 3
6 **Specifications** ... 3
6.1 Absolute Maximum Ratings ... 3
6.2 ESD Ratings ... 3
6.3 Recommended Operating Conditions ... 4
6.4 Thermal Information ... 4
6.5 Electrical Characteristics ... 4
6.6 Magnetic Characteristics ... 4
6.7 Typical Characteristics ... 5
7 **Detailed Description** ... 7
7.1 Overview ... 7
7.2 Functional Block Diagram ... 7
7.3 Feature Description ... 7
7.4 Device Functional Modes ... 12
8 **Application and Implementation** ... 13
8.1 Application Information ... 13
8.2 Typical Applications ... 13
8.3 What to Do and What Not to Do ... 16
9 **Power Supply Recommendations** ... 17
10 **Layout** ... 17
10.1 Layout Guidelines ... 17
10.2 Layout Example ... 17
11 器件和文档支持 ... 18
11.1 文档支持 ... 18
11.2 接收文档更新通知 ... 18
11.3 社区资源 ... 18
11.4 商标 ... 18
11.5 静电放电警告 ... 18
11.6 术语表 ... 18
12 机械、封装和可订购信息 ... 18

4 修订历史记录

Changes from Original (June 2018) to Revision A	**Page**
• Changed output voltage max value from V_{CC} + 0.3 V to 6.0 V in the *Absolute Maximum Ratings* table	3

Copyright © 2018–2019, Texas Instruments Incorporated

5 Pin Configuration and Functions

DBZ Package
3-Pin SOT-23
Top View

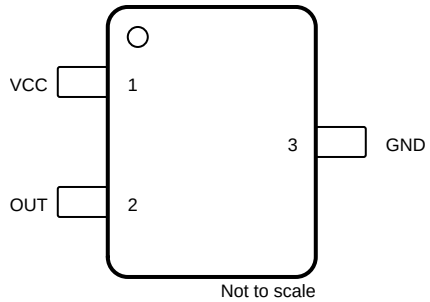

Pin Functions

PIN		TYPE	DESCRIPTION
NAME	NO.		
GND	3	Ground	Ground reference.
OUT	2	Output	Open-drain output.
VCC	1	Power supply	2.5-V to 5.5-V power supply. Connect a ceramic capacitor with a value of at least 0.01 µF between VCC and ground.

6 Specifications

6.1 Absolute Maximum Ratings

over operating free-air temperature range (unless otherwise noted)[(1)]

		MIN	MAX	UNIT
V_{CC}	Power supply voltage	–0.3	6.0	V
V_{OUT}	Output voltage	–0.3	6.0	V
I_{OUT}	Output current		30	mA
B_{MAX}	Magnetic flux density		Unlimited	T
T_J	Operating junction temperature	–40	150	°C
T_{stg}	Storage temperature	–65	150	°C

(1) Stresses beyond those listed under Absolute Maximum Ratings may cause permanent damage to the device. These are stress ratings only, which do not imply functional operation of the device at these or any other conditions beyond those indicated under Recommended Operating Conditions. Exposure to absolute-maximum-rated conditions for extended periods may affect device reliability.

6.2 ESD Ratings

over operating free-air temperature range (unless otherwise noted)

			VALUE	UNIT
$V_{(ESD)}$	Electrostatic discharge	Human body model (HBM), per ANSI/ESDA/JEDEC JS-001[(1)]	±5000	V
		Charged device model (CDM), per JEDEC specification JESD22-C101[(2)]	±1500	V

(1) JEDEC document JEP155 states that 500-V HBM allows safe manufacturing with a standard ESD control process
(2) JEDEC document JEP157 states that 250-V CDM allows safe manufacturing with a standard ESD control process.

Copyright © 2018–2019, Texas Instruments Incorporated

6.3 Recommended Operating Conditions

over operating free-air temperature range (unless otherwise noted)

		MIN	MAX	UNIT
V_{CC}	Power supply voltage	2.5	5.5	V
V_{OUT}	Output pin voltage	0	5.5	V
I_{OUT}	Output sinking current	0	20	mA
T_A	Operating ambient temperature	–40	125	°C

6.4 Thermal Information

THERMAL METRIC[1]		DRV5015 SOT-23 (DBZ) 3 PINS	UNIT
$R_{\theta JA}$	Junction-to-ambient thermal resistance	356	°C/W
$R_{\theta JC(top)}$	Junction-to-case (top) thermal resistance	128	°C/W
$R_{\theta JB}$	Junction-to-board thermal resistance	94	°C/W
Y_{JT}	Junction-to-top characterization parameter	11.4	°C/W
Y_{JB}	Junction-to-board characterization parameter	92	°C/W

(1) For information about traditional and new thermal metrics, see the *Semiconductor and IC Package Thermal Metrics* application report.

6.5 Electrical Characteristics

at V_{CC} = 2.5 V to 5.5 V, over operating free-air temperature range (unless otherwise noted)

PARAMETER		TEST CONDITION	MIN	TYP	MAX	UNIT
I_{CC}	Operating supply current			2.3	2.8	mA
t_{ON}	Power-on time			40	70	µs
t_d	Propagation delay time[1]	B = B_{RP} – 10 mT to B_{OP} + 10 mT in 1 µs		13	25	µs
I_{OZ}	High-impedance output leakage current	5.5 V applied to OUT, while OUT is high-impedance			100	nA
V_{OL}	Low-level output voltage	I_{OUT} = 20 mA		0.15	0.4	V

(1) See the *Propagation Delay* section for more information.

6.6 Magnetic Characteristics

at V_{CC} = 2.5 V to 5.5 V, over operating free-air temperature range (unless otherwise noted)

PARAMETER		TEST CONDITION	MIN	TYP	MAX	UNIT
DRV5015A1, DRV5015A2, DRV5015A3						
f_{BW}	Sensing bandwidth		20	30		kHz
DRV5015A1						
B_{OP}	Magnetic threshold operate point		–0.2	0.7	2.0	mT
B_{RP}	Magnetic threshold release point		–2.0	–0.7	0.2	mT
B_{HYS}	Magnetic hysteresis: $\lvert B_{OP} – B_{RP}\rvert$		0.35	1.4		mT
DRV5015A2DRV5015A3						
B_{OP}	Magnetic threshold operate point		0.5	1.8	3.7	mT
B_{RP}	Magnetic threshold release point		–3.7	–1.8	-0.5	mT
B_{HYS}	Magnetic hysteresis: $\lvert B_{OP} – B_{RP}\rvert$		2.3	3.6		mT

版权 © 2018–2019, Texas Instruments Incorporated

6.7 Typical Characteristics

at T_A = 25°C typical (unless otherwise noted)

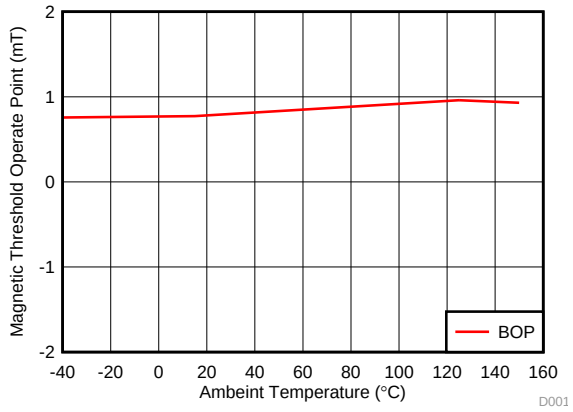

图 1. B_{OP} Threshold vs Temperature (DRV5015A1)

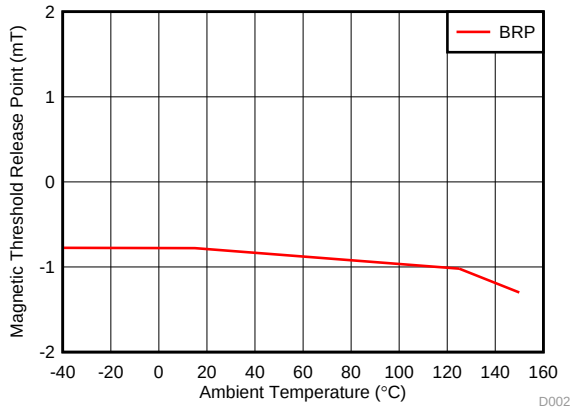

图 2. B_{RP} Threshold vs Temperature (DRV5015A1)

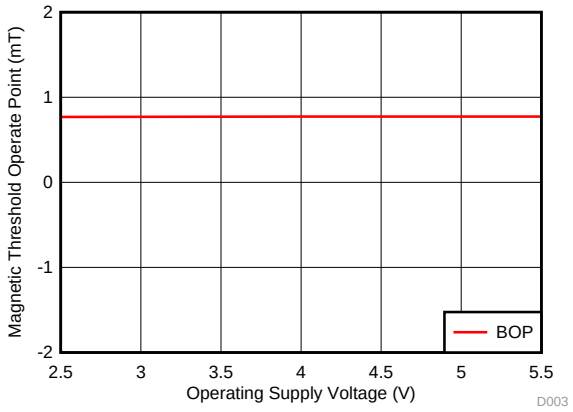

图 3. B_{OP} Threshold vs Supply Voltage (DRV5015A1)

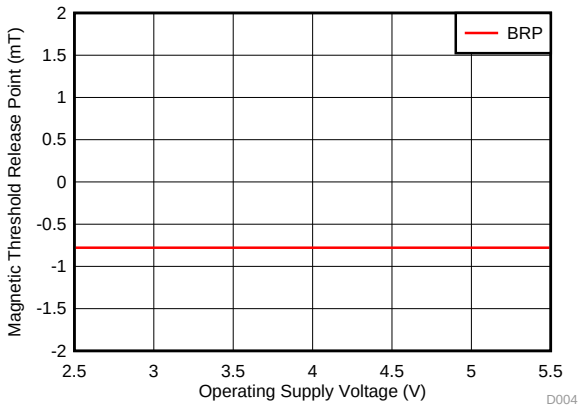

图 4. B_{RP} Threshold vs Supply Voltage (DRV5015A1)

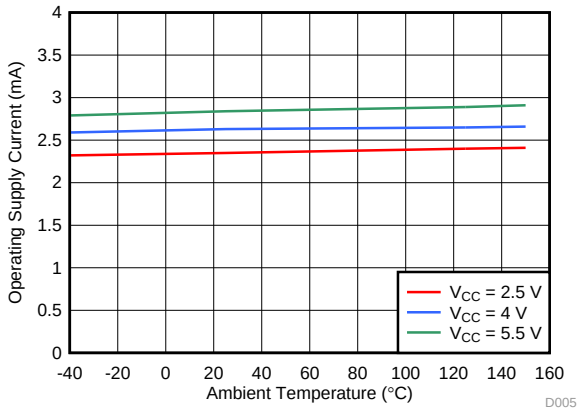

图 5. I_{CC} vs Temperature (DRV5015A1)

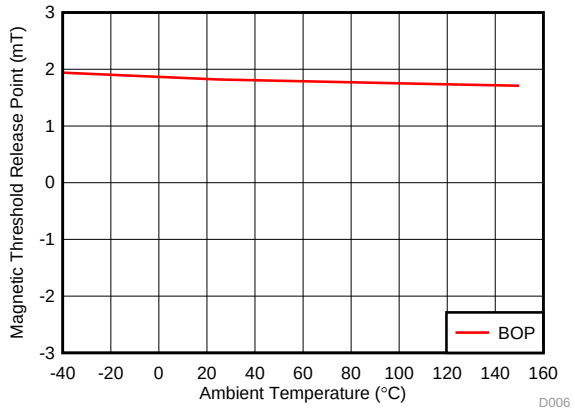

图 6. B_{OP} Threshold vs Temperature (DRV5015A2, DRV5015A3)

Typical Characteristics (接下页)

at T_A = 25°C typical (unless otherwise noted)

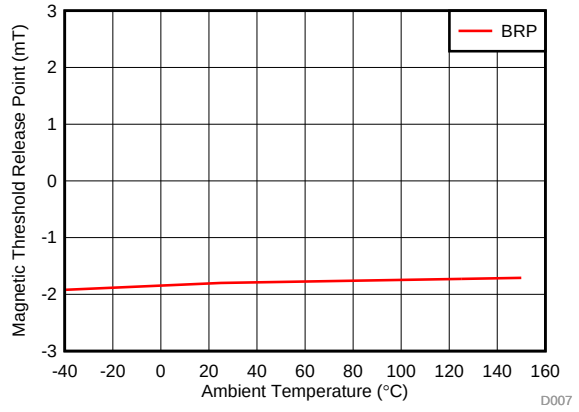

图 7. B_{RP} Threshold vs Temperature (DRV5015A2, DRV5015A3)

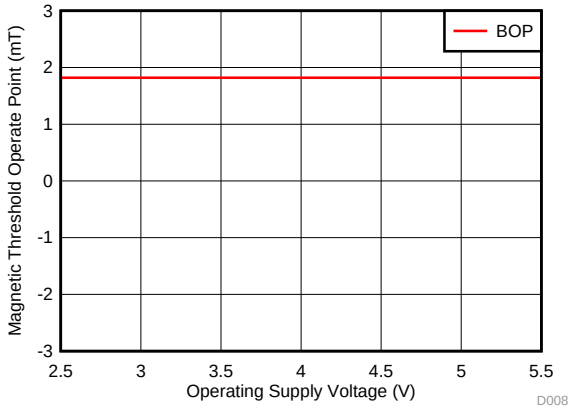

图 8. B_{OP} Threshold vs Supply Voltage (DRV5015A2, DRV5015A3)

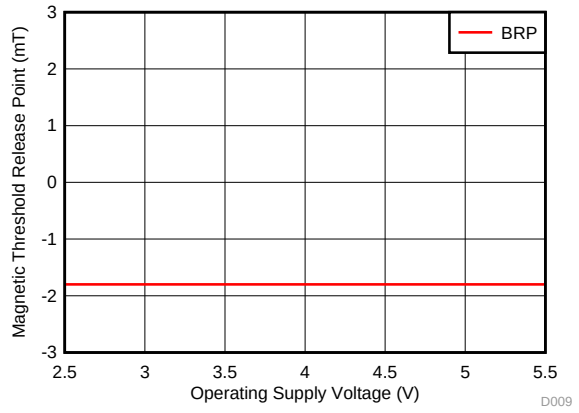

图 9. B_{RP} Threshold vs Supply Voltage (DRV5015A2, DRV5015A3)

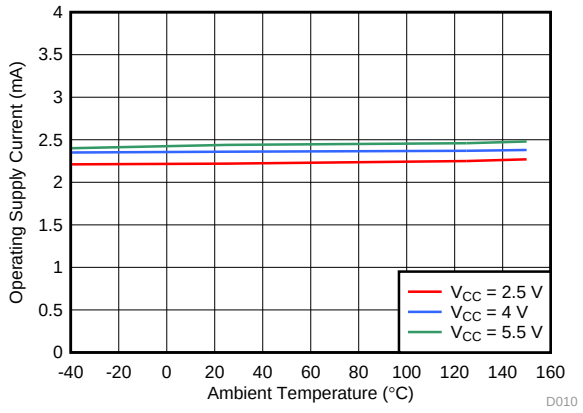

图 10. I_{CC} vs Temperature (DRV5015A2, DRV5015A3)

版权 © 2018–2019, Texas Instruments Incorporated

7 Detailed Description

7.1 Overview

The DRV5015 is a magnetic sensor with a digital output that latches the most recent pole measured. During power-up, in the absence of an external magnetic field, the DRV5015A1 and DRV5015A2 default to a low output state and the DRV5015A3 defaults to a high output state. Applying a south magnetic pole near the top of the package causes the DRV5015A1 and DRV5015A2 output to drive low, whereas a north magnetic pole causes this output to drive high. Applying a south magnetic pole near the top of the package causes the DRV5015A3 output to drive high, whereas a north magnetic pole causes this output to drive low. The absence of a magnetic field causes the output to continue to drive the current state, whether low or high.

The device integrates a Hall effect element, analog signal conditioning, offset cancellation circuits, amplifiers, and comparators. These features provide stable performance across a wide temperature range and resistance to mechanical stress.

7.2 Functional Block Diagram

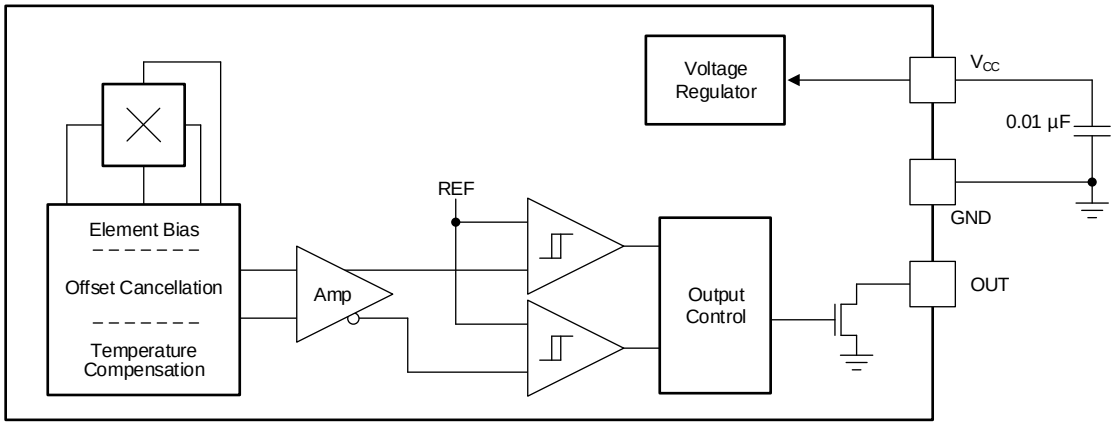

7.3 Feature Description

7.3.1 Magnetic Flux Direction

As shown in 图 11, the DRV5015 is sensitive to the magnetic field component that is perpendicular to the top of the package.

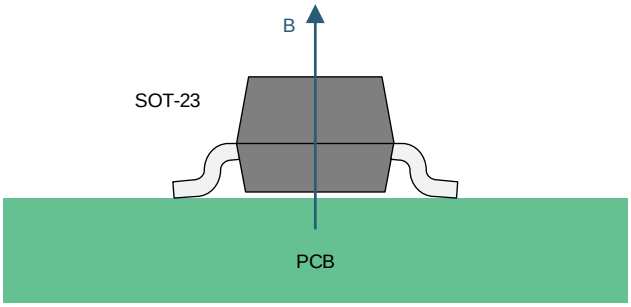

图 11. Direction of Sensitivity

Feature Description (接下页)

Magnetic flux that travels from the bottom to the top of the package is considered positive in this document. This condition exists when a south magnetic pole is near the top of the package. Magnetic flux that travels from the top to the bottom of the package is considered negative. 图 12 shows the flux direction polarity.

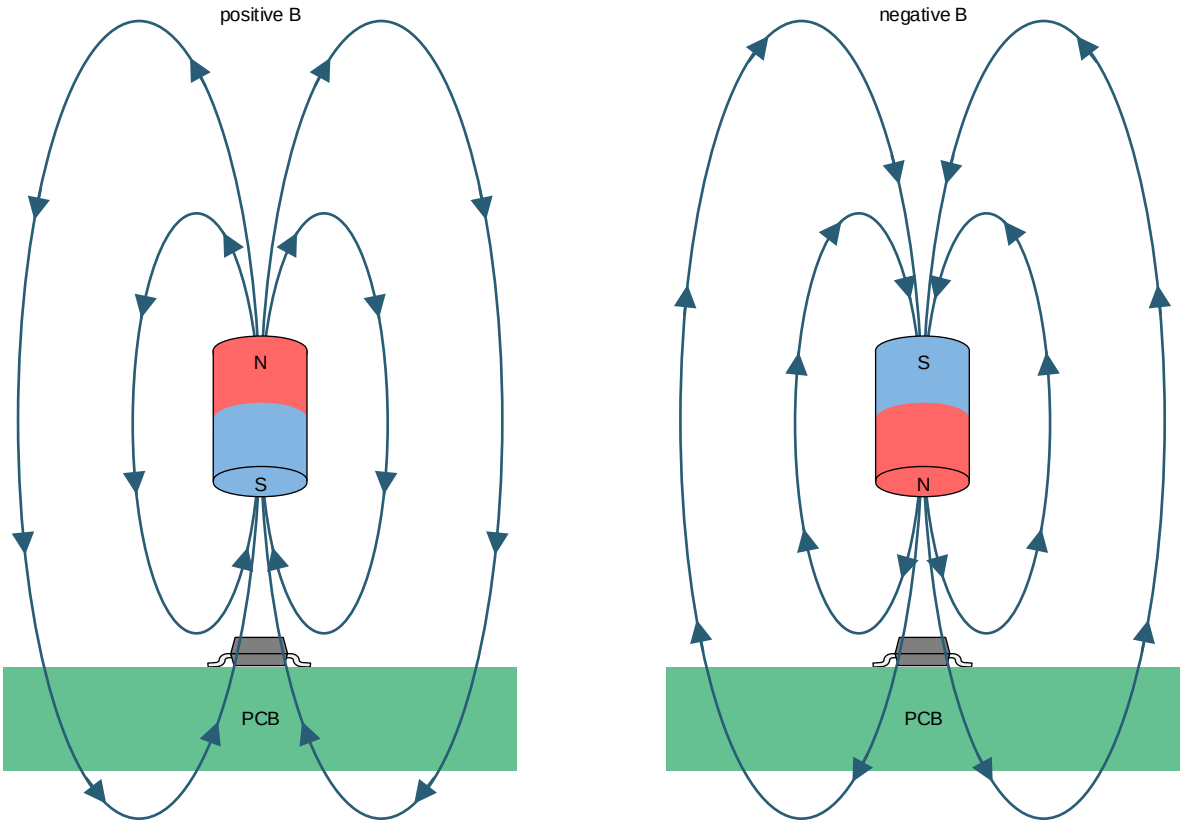

图 12. Flux Direction Polarity

版权 © 2018–2019, Texas Instruments Incorporated

Feature Description (接下页)

7.3.2 Magnetic Response

图 13 shows the device output response to stimulus and hysteresis.

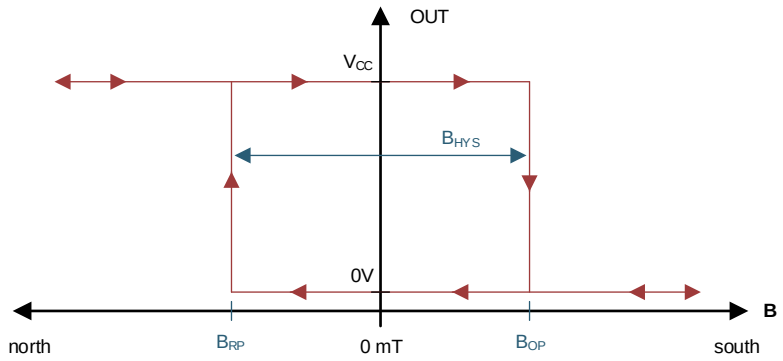

DRV5015A1, DRV5015A2

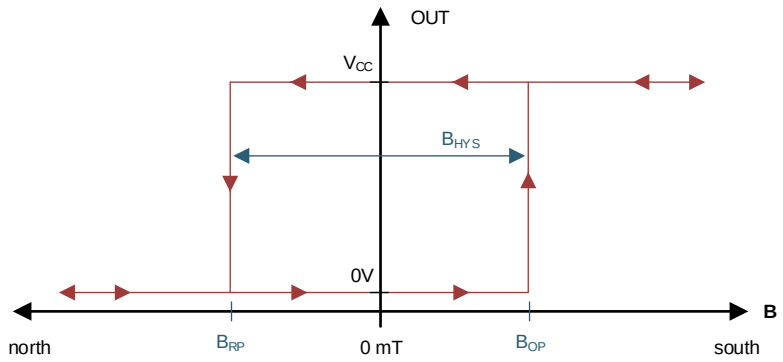

DRV5015A3

图 13. Device Output Response to Stimulus

Feature Description (接下页)

7.3.3 Output Driver

图 14 shows the DRV5015 open-drain output structure. An open-drain output offers flexibility by enabling system designers to interface to wide-range GPIO termination voltages. C1 represents the input capacitance of the GPIO. R1 represents the pullup resistor connected to the termination voltage, $V_{PULL-UP}$. The maximum allowable value of V_{PULL_UP} is 5.5 V. The value of R1 must be selected after proper considerations among the system speed and the power dissipation through the pullup resistor.

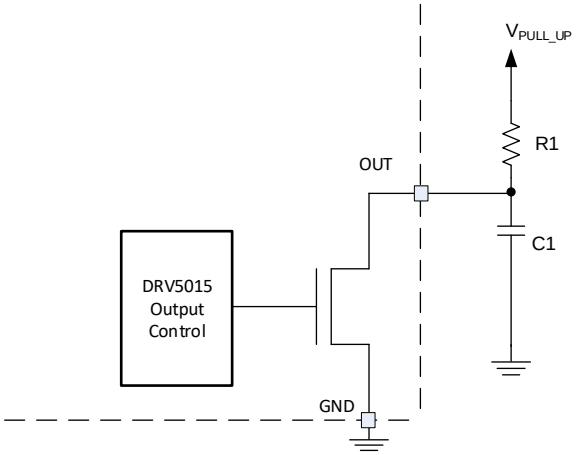

图 14. Open-Drain Output (Simplified)

7.3.4 Power-On Time

图 15 shows that after the V_{CC} voltage is applied, the DRV5015 measures the magnetic field and sets the output within the t_{ON} time.

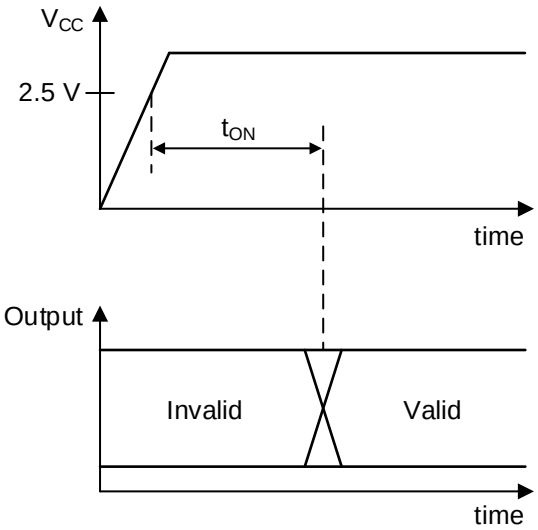

图 15. t_{ON} Definition

版权 © 2018–2019, Texas Instruments Incorporated

Feature Description (接下页)

7.3.5 Hall Element Location

The sensing element inside the device is in the center of both packages when viewed from the top. 图 16 shows the tolerances and side-view dimensions.

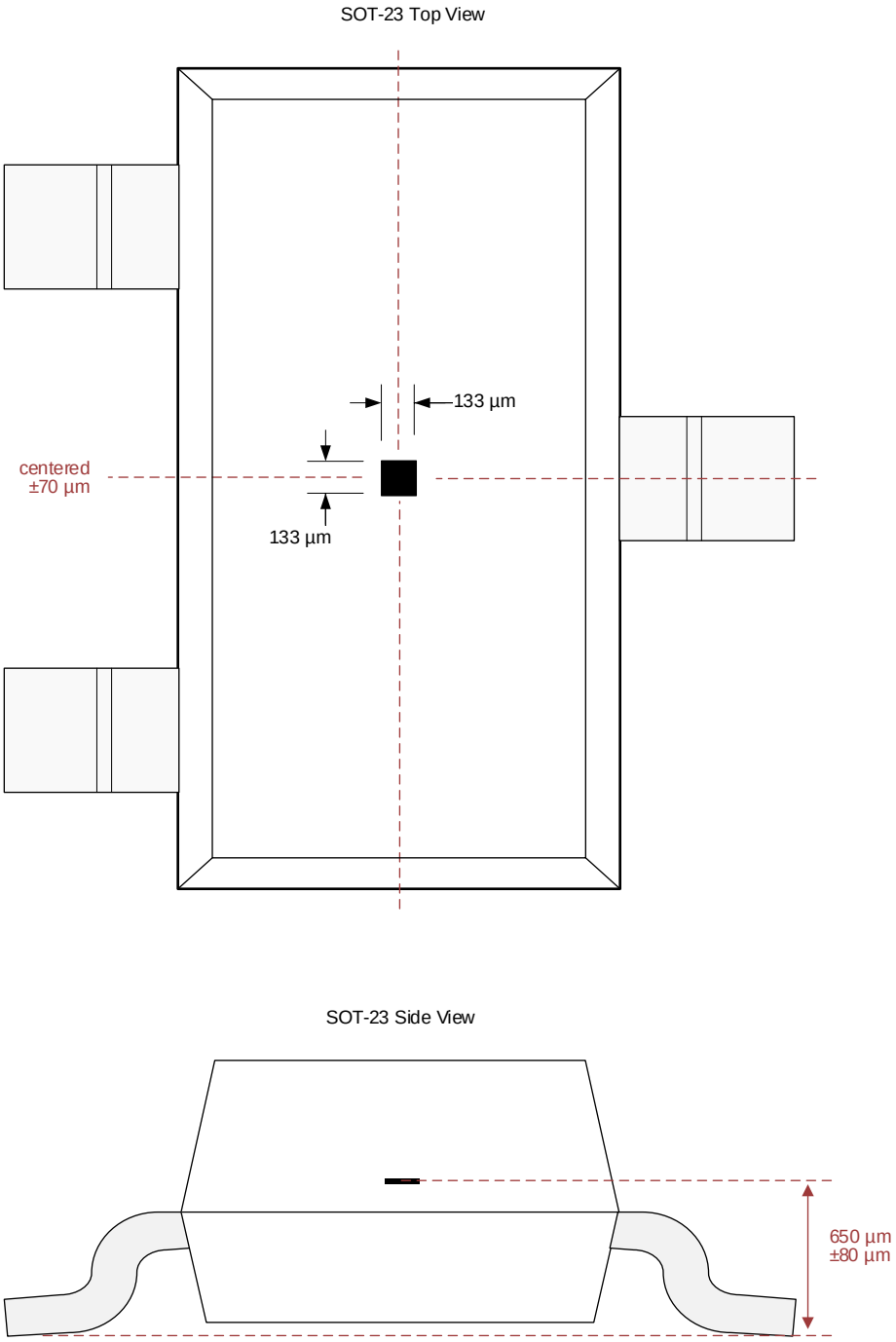

图 16. Hall Element Location

Feature Description (接下页)

7.3.6 Propagation Delay

The DRV5015 samples the Hall element at a nominal sampling interval of every 16.67 µs to detect the presence of a magnetic north or south pole. At each sampling point, the device takes the average of the current sampled value and immediately preceding sampled value of the magnetic field. If this average value crosses the B_{OP} or B_{RP} threshold, the device output changes to the corresponding state as defined by the *Overview* section.

图 17 shows the DRV5015A1 propagation delay analysis in the proximity of a magnetic south pole. The Hall element of the DRV5015 experiences an increasing magnetic field as a magnetic south pole approaches near the device. At time t_2, the average magnetic field is $(B_2 + B_1) / 2$, which is below the B_{OP} threshold of the device. At time t_3, the actual magnetic field has crossed the B_{OP} threshold. However, the average $(B_3 + B_2) / 2$ is still less than the B_{OP} threshold. As such, the device waits for next sample time, t_4, to start the output transition through the analog signal chain. The propagation delay, t_d, is measured as the delay from the time the magnetic field crosses the B_{OP} threshold to the time output transitions.

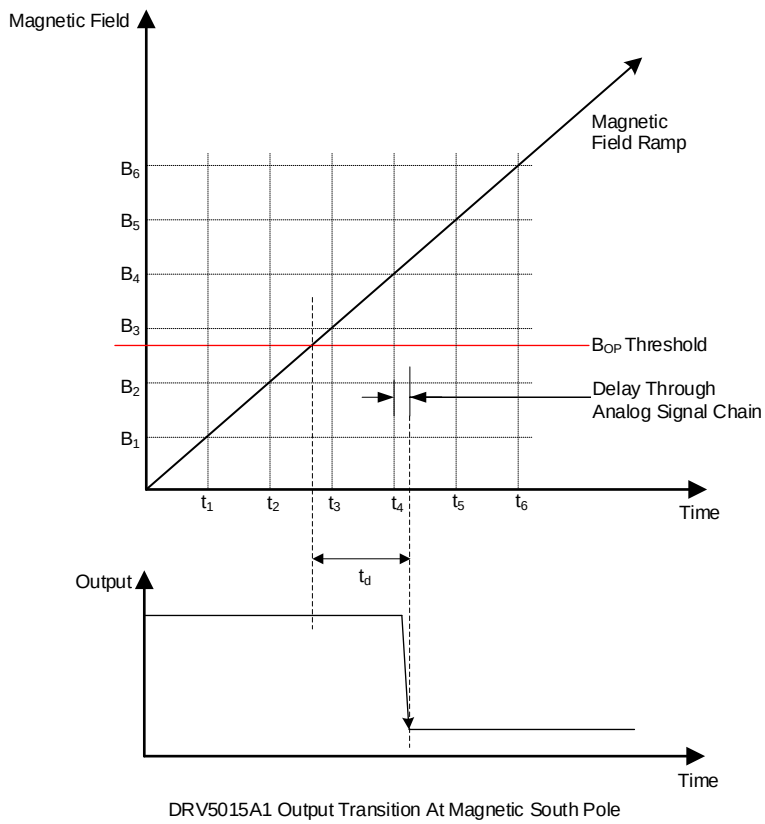

图 17. Propagation Delay

7.4 Device Functional Modes

The DRV5015 has one mode of operation that applies when the are met.

版权 © 2018–2019, Texas Instruments Incorporated

8 Application and Implementation

注

Information in the following applications sections is not part of the TI component specification, and TI does not warrant its accuracy or completeness. TI's customers are responsible for determining suitability of components for their purposes. Customers should validate and test their design implementation to confirm system functionality.

8.1 Application Information

The DRV5015 is ideal for use in rotary applications for brushless DC (BLDC) motor sensors or incremental rotary encoding.

For reliable functionality, the magnet must apply a flux density at the sensor greater than the corresponding maximum B_{OP} or B_{RP} numbers specified in the table. Add additional margin to account for mechanical tolerance, temperature effects, and magnet variation. Magnets generally produce weaker fields as temperature increases.

8.2 Typical Applications

8.2.1 BLDC Motor Sensors Application

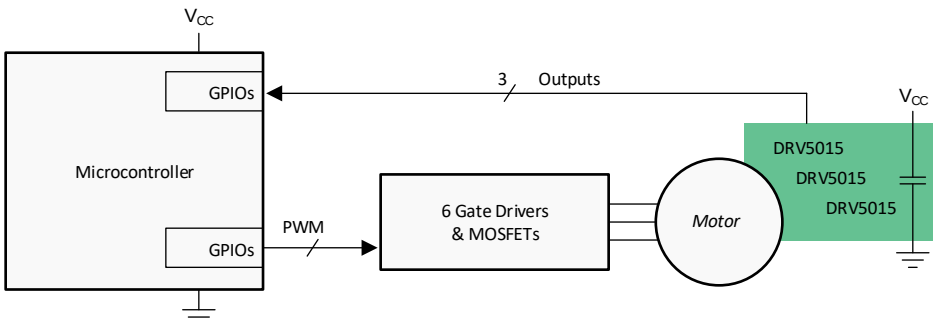

图 18. BLDC Motor System

8.2.1.1 Design Requirements

Use the parameters listed in 表 1 for this design.

表 1. Design Parameters

DESIGN PARAMETER	EXAMPLE VALUE
Number of motor phases	3
Motor RPM	15 kRPM
Number of magnet poles on the rotor	12
Magnetic material	Bonded neodymium
Maximum temperature inside the motor	125°C
Magnetic flux density peaks at the Hall sensors at maximum temperature	±11 mT
Hall sensor V_{CC}	5 V ± 10%

8.2.1.2 Detailed Design Procedure

Three-phase brushless DC motors often use three Hall effect latch devices to measure the electrical angle of the rotor and tell the controller how to drive the three wires. These wires connect to electromagnet windings, which generate magnetic fields that apply forces to the permanent magnets on the rotor.

Space the three Hall sensors across the printed-circuit board (PCB) so that these sensors are 120 electrical degrees apart. This configuration creates six 3-bit states with equal time duration for each electrical cycle, which consists of one north and one south magnetic pole. From the center of the motor axis, the number of degrees to space each sensor equals *2 / [number of poles] × 120°*. In this design example, the first sensor is placed at 0°, the second sensor is placed 20° rotated, and the third sensor is placed 40° rotated. Alternatively, a 3× degree offset can be added or subtracted to any sensor, meaning that the third sensor can alternatively be placed at 40° – (3 × 20°) = –20°.

8.2.1.3 Application Curve

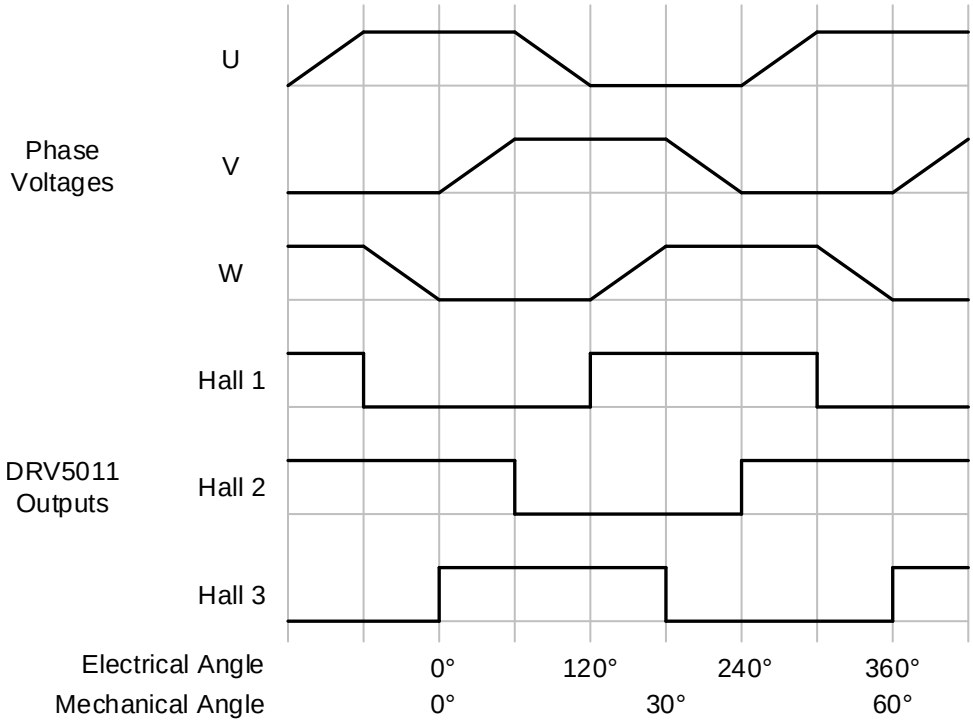

图 19. Phase Voltages and Hall Signals for a 3-Phase BLDC Motor

版权 © 2018–2019, Texas Instruments Incorporated

8.2.2 Incremental Rotary Encoding Application

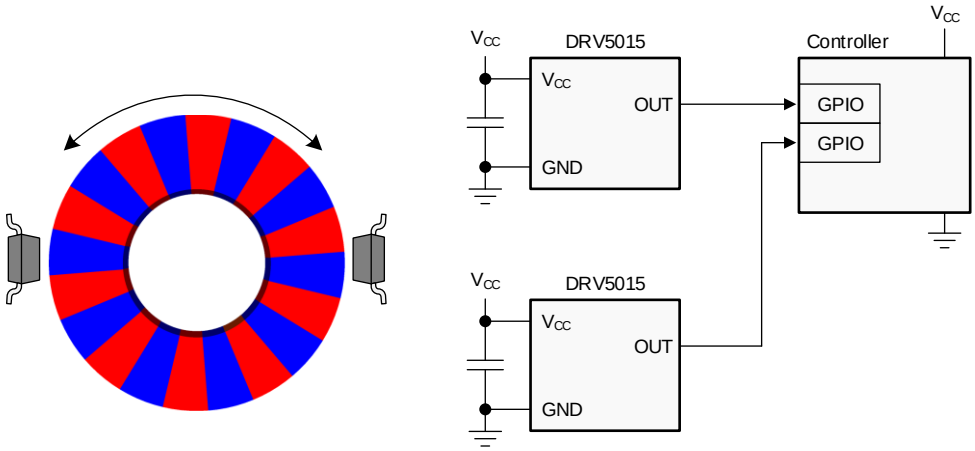

图 20. Incremental Rotary Encoding System

8.2.2.1 Design Requirements

Use the parameters listed in 表 2 for this design.

表 2. Design Parameters

DESIGN PARAMETER	EXAMPLE VALUE
RPM range	45 kRPM
Number of magnet poles	8
Magnetic material	Ferrite
Air gap above the Hall sensors	2.5 mm
Magnetic flux density peaks at the Hall sensors at maximum temperature	±7 mT

8.2.2.2 Detailed Design Procedure

Incremental encoders are used on knobs, wheels, motors, and flow meters to measure relative rotary movement. By attaching a ring magnet to the rotating component and placing a DRV5015 nearby, the sensor generates voltage pulses as the magnet turns. If directional information is also needed (clockwise versus counterclockwise), a second DRV5015 can be added with a phase offset, and then the order of transitions between the two signals describes the direction.

Creating this phase offset requires spacing the two sensors apart on the PCB, and an ideal 90° quadrature offset is attained when the sensors are separated by half the length of each magnet pole, plus any integer number of pole lengths. 图 20 shows this configuration because the sensors are 1.5 pole lengths apart. One of the sensors changes its output every *360° / 8 poles / 2 sensors* = 22.5° of rotation. For reference, the *TIDA-00480 TI Design Considerations Automotive Hall Sensor Rotary Encoder* uses a 66-pole magnet with changes every 2.7°.

The maximum rotational speed that can be measured is limited by the sensor bandwidth. Generally, the bandwidth must be faster than two times the number of poles per second. In this design example, the maximum speed is 45000 RPM, which involves 6000 poles per second. The DRV5015 sensing bandwidth is typically 30 kHz, which is five times the pole frequency. In systems where the sensor sampling rate is close to two times the number of poles per second, most of the samples measure a magnetic field that is significantly lower than the peak value, because the peaks only occur when the sensor and pole are perfectly aligned. In this case, add margin by applying a stronger magnetic field that has peaks significantly higher than the maximum B_{OP}.

8.2.2.3 Application Curve

Two signals in quadrature provide movement and direction information. 图 21 shows how each 2-bit state has unique adjacent 2-bit states for clockwise and counterclockwise.

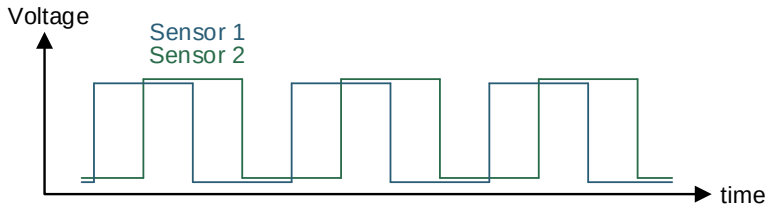

图 21. Quadrature Output (2-Bit)

8.3 What to Do and What Not to Do

The Hall element is sensitive to magnetic fields that are perpendicular to the top of the package; therefore, the correct magnet orientation must be used for the sensor to detect the field. 图 22 shows correct and incorrect orientations when using a ring magnet.

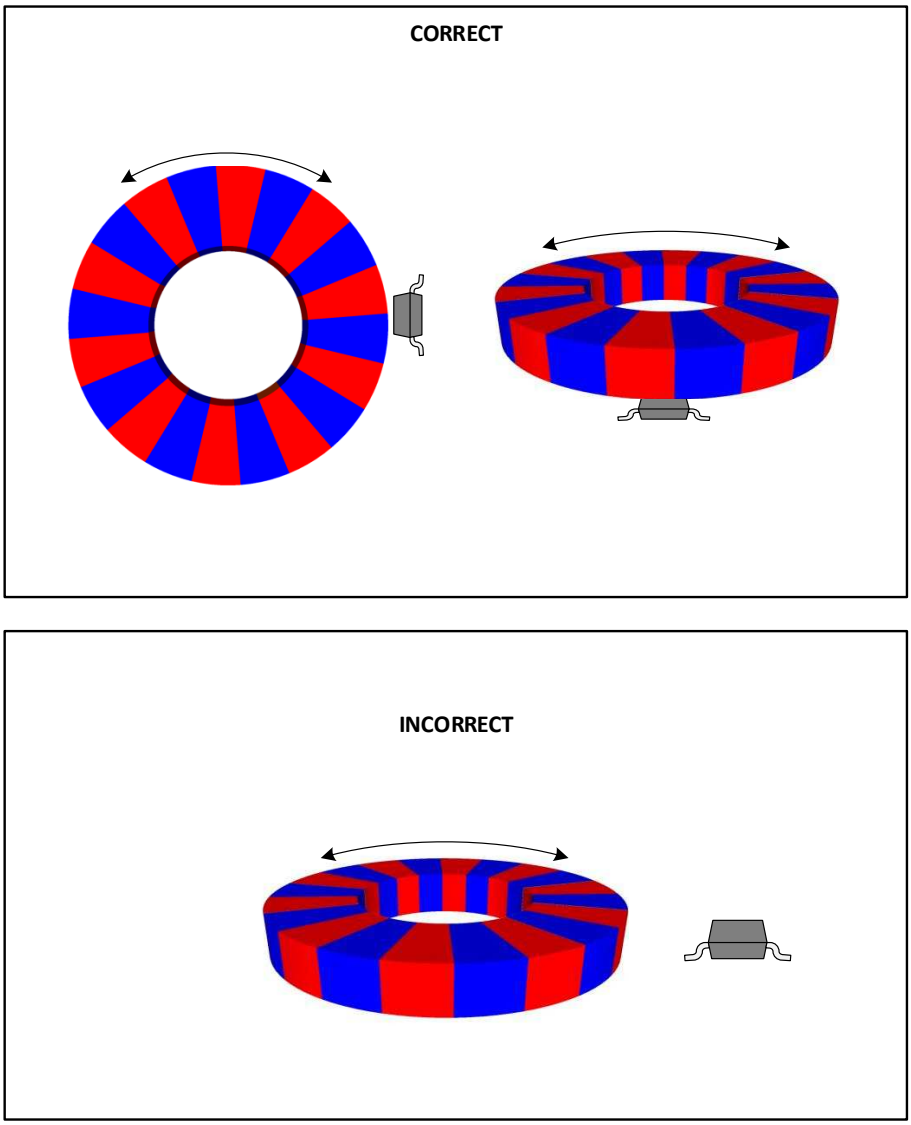

图 22. Correct and Incorrect Magnet Orientations

版权 © 2018–2019, Texas Instruments Incorporated

9 Power Supply Recommendations

The DRV5015 is powered from 2.5-V to 5.5-V DC power supplies. A decoupling capacitor close to the device must be used to provide local energy with minimal inductance. TI recommends using a ceramic capacitor with a value of at least 0.01 µF.

10 Layout

10.1 Layout Guidelines

Magnetic fields pass through most nonferromagnetic materials with no significant disturbance. Embedding Hall effect sensors within plastic or aluminum enclosures and sensing magnets on the outside is common practice. Magnetic fields also easily pass through most PCBs, which makes placing the magnet on the opposite side of the PCB possible.

10.2 Layout Example

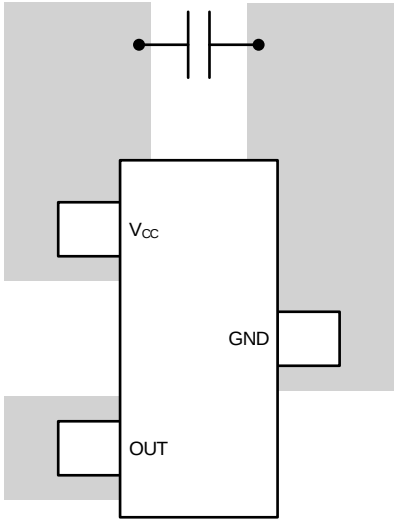

图 23. Example Layout

11 器件和文档支持

11.1 文档支持

11.1.1 相关文档

请参阅如下相关文档：

- *《TIDA-00480 TI 设计注意事项 - 汽车霍尔传感器旋转编码器》*
- *《HALL-ADAPTER-EVM》*用户指南

11.2 接收文档更新通知

要接收文档更新通知，请导航至 TI.com.cn 上的器件产品文件夹。单击右上角的*通知我* 进行注册，即可每周接收产品信息更改摘要。有关更改的详细信息，请查看任何已修订文档中包含的修订历史记录。

11.3 社区资源

下列链接提供到 TI 社区资源的连接。链接的内容由各个分销商"按照原样"提供。这些内容并不构成 TI 技术规范，并且不一定反映 TI 的观点；请参阅 TI 的 《使用条款》。

TI E2E™ Online Community ***TI's Engineer-to-Engineer (E2E) Community.*** Created to foster collaboration among engineers. At e2e.ti.com, you can ask questions, share knowledge, explore ideas and help solve problems with fellow engineers.

Design Support ***TI's Design Support*** Quickly find helpful E2E forums along with design support tools and contact information for technical support.

11.4 商标

E2E is a trademark of Texas Instruments.
All other trademarks are the property of their respective owners.

11.5 静电放电警告

ESD 可能会损坏该集成电路。德州仪器 (TI) 建议通过适当的预防措施处理所有集成电路。如果不遵守正确的处理措施和安装程序，可能会损坏集成电路。

ESD 的损坏小至导致微小的性能降级，大至整个器件故障。 精密的集成电路可能更容易受到损坏，这是因为非常细微的参数更改都可能会导致器件与其发布的规格不相符。

11.6 术语表

SLYZ022 — *TI 术语表*。

这份术语表列出并解释术语、缩写和定义。

12 机械、封装和可订购信息

以下页面包含机械、封装和可订购信息。这些信息是指定器件的最新可用数据。数据如有变更，恕不另行通知，且不会对此文档进行修订。如需获取此产品说明书的浏览器版本，请查阅左侧的导航栏。

版权 © 2018–2019, Texas Instruments Incorporated

PACKAGING INFORMATION

Orderable part number	Status (1)	Material type (2)	Package | Pins	Package qty | Carrier	RoHS (3)	Lead finish/ Ball material (4)	MSL rating/ Peak reflow (5)	Op temp (°C)	Part marking (6)
DRV5015A1QDBZR	Active	Production	SOT-23 (DBZ) | 3	3000 | LARGE T&R	Yes	SN	Level-1-260C-UNLIM	-40 to 125	15A1
DRV5015A1QDBZR.A	Active	Production	SOT-23 (DBZ) | 3	3000 | LARGE T&R	Yes	SN	Level-1-260C-UNLIM	-40 to 125	15A1
DRV5015A1QDBZT	Obsolete	Production	SOT-23 (DBZ) | 3	-	-	Call TI	Call TI	-40 to 125	15A1
DRV5015A2QDBZR	Active	Production	SOT-23 (DBZ) | 3	3000 | LARGE T&R	Yes	SN	Level-1-260C-UNLIM	-40 to 125	15A2
DRV5015A2QDBZR.A	Active	Production	SOT-23 (DBZ) | 3	3000 | LARGE T&R	Yes	SN	Level-1-260C-UNLIM	-40 to 125	15A2
DRV5015A2QDBZT	Obsolete	Production	SOT-23 (DBZ) | 3	-	-	Call TI	Call TI	-40 to 125	15A2
DRV5015A3QDBZR	Active	Production	SOT-23 (DBZ) | 3	3000 | LARGE T&R	Yes	SN	Level-1-260C-UNLIM	-40 to 125	15A3
DRV5015A3QDBZR.A	Active	Production	SOT-23 (DBZ) | 3	3000 | LARGE T&R	Yes	SN	Level-1-260C-UNLIM	-40 to 125	15A3
DRV5015A3QDBZT	Obsolete	Production	SOT-23 (DBZ) | 3	-	-	Call TI	Call TI	-40 to 125	15A3

(1) **Status:** For more details on status, see our product life cycle.

(2) **Material type:** When designated, preproduction parts are prototypes/experimental devices, and are not yet approved or released for full production. Testing and final process, including without limitation quality assurance, reliability performance testing, and/or process qualification, may not yet be complete, and this item is subject to further changes or possible discontinuation. If available for ordering, purchases will be subject to an additional waiver at checkout, and are intended for early internal evaluation purposes only. These items are sold without warranties of any kind.

(3) **RoHS values:** Yes, No, RoHS Exempt. See the TI RoHS Statement for additional information and value definition.

(4) **Lead finish/Ball material:** Parts may have multiple material finish options. Finish options are separated by a vertical ruled line. Lead finish/Ball material values may wrap to two lines if the finish value exceeds the maximum column width.

(5) **MSL rating/Peak reflow:** The moisture sensitivity level ratings and peak solder (reflow) temperatures. In the event that a part has multiple moisture sensitivity ratings, only the lowest level per JEDEC standards is shown. Refer to the shipping label for the actual reflow temperature that will be used to mount the part to the printed circuit board.

(6) **Part marking:** There may be an additional marking, which relates to the logo, the lot trace code information, or the environmental category of the part.

Multiple part markings will be inside parentheses. Only one part marking contained in parentheses and separated by a "~" will appear on a part. If a line is indented then it is a continuation of the previous line and the two combined represent the entire part marking for that device.

Important Information and Disclaimer: The information provided on this page represents TI's knowledge and belief as of the date that it is provided. TI bases its knowledge and belief on information provided by third parties, and makes no representation or warranty as to the accuracy of such information. Efforts are underway to better integrate information from third parties. TI has taken and continues to take reasonable steps to provide representative

and accurate information but may not have conducted destructive testing or chemical analysis on incoming materials and chemicals. TI and TI suppliers consider certain information to be proprietary, and thus CAS numbers and other limited information may not be available for release.

In no event shall TI's liability arising out of such information exceed the total purchase price of the TI part(s) at issue in this document sold by TI to Customer on an annual basis.

OTHER QUALIFIED VERSIONS OF DRV5015 :

- Automotive : DRV5015-Q1

NOTE: Qualified Version Definitions:

- Automotive - Q100 devices qualified for high-reliability automotive applications targeting zero defects

TAPE AND REEL INFORMATION

REEL DIMENSIONS

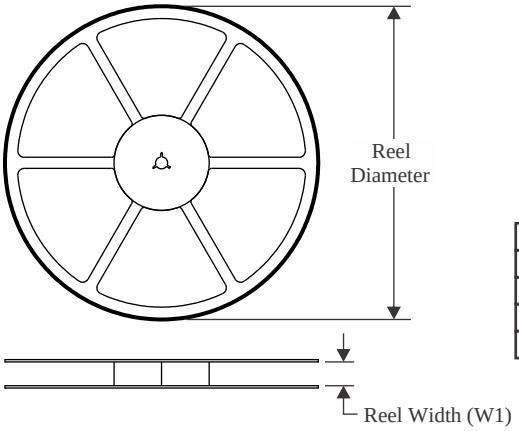

TAPE DIMENSIONS

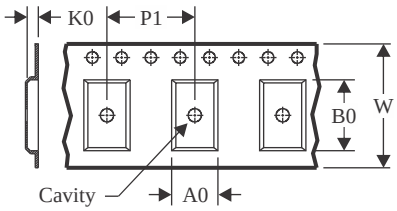

A0	Dimension designed to accommodate the component width
B0	Dimension designed to accommodate the component length
K0	Dimension designed to accommodate the component thickness
W	Overall width of the carrier tape
P1	Pitch between successive cavity centers

QUADRANT ASSIGNMENTS FOR PIN 1 ORIENTATION IN TAPE

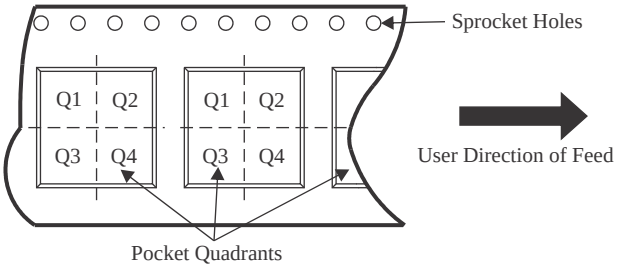

*All dimensions are nominal

Device	Package Type	Package Drawing	Pins	SPQ	Reel Diameter (mm)	Reel Width W1 (mm)	A0 (mm)	B0 (mm)	K0 (mm)	P1 (mm)	W (mm)	Pin1 Quadrant
DRV5015A1QDBZR	SOT-23	DBZ	3	3000	180.0	8.4	3.2	2.85	1.3	4.0	8.0	Q3
DRV5015A2QDBZR	SOT-23	DBZ	3	3000	180.0	8.4	3.2	2.85	1.3	4.0	8.0	Q3
DRV5015A3QDBZR	SOT-23	DBZ	3	3000	180.0	8.4	3.2	2.85	1.3	4.0	8.0	Q3

TAPE AND REEL BOX DIMENSIONS

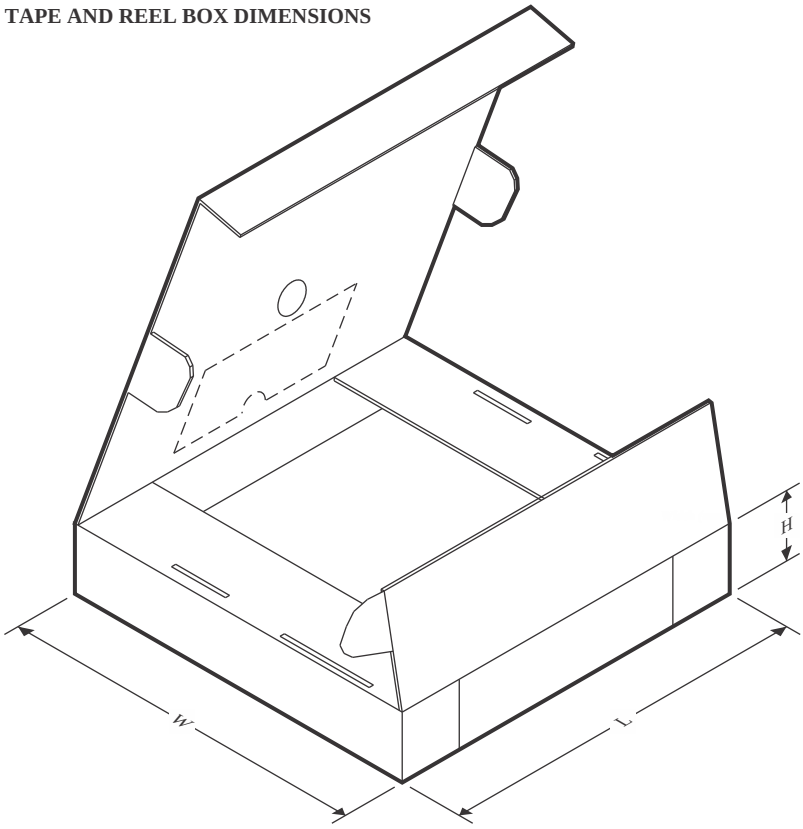

*All dimensions are nominal

Device	Package Type	Package Drawing	Pins	SPQ	Length (mm)	Width (mm)	Height (mm)
DRV5015A1QDBZR	SOT-23	DBZ	3	3000	210.0	185.0	35.0
DRV5015A2QDBZR	SOT-23	DBZ	3	3000	210.0	185.0	35.0
DRV5015A3QDBZR	SOT-23	DBZ	3	3000	210.0	185.0	35.0

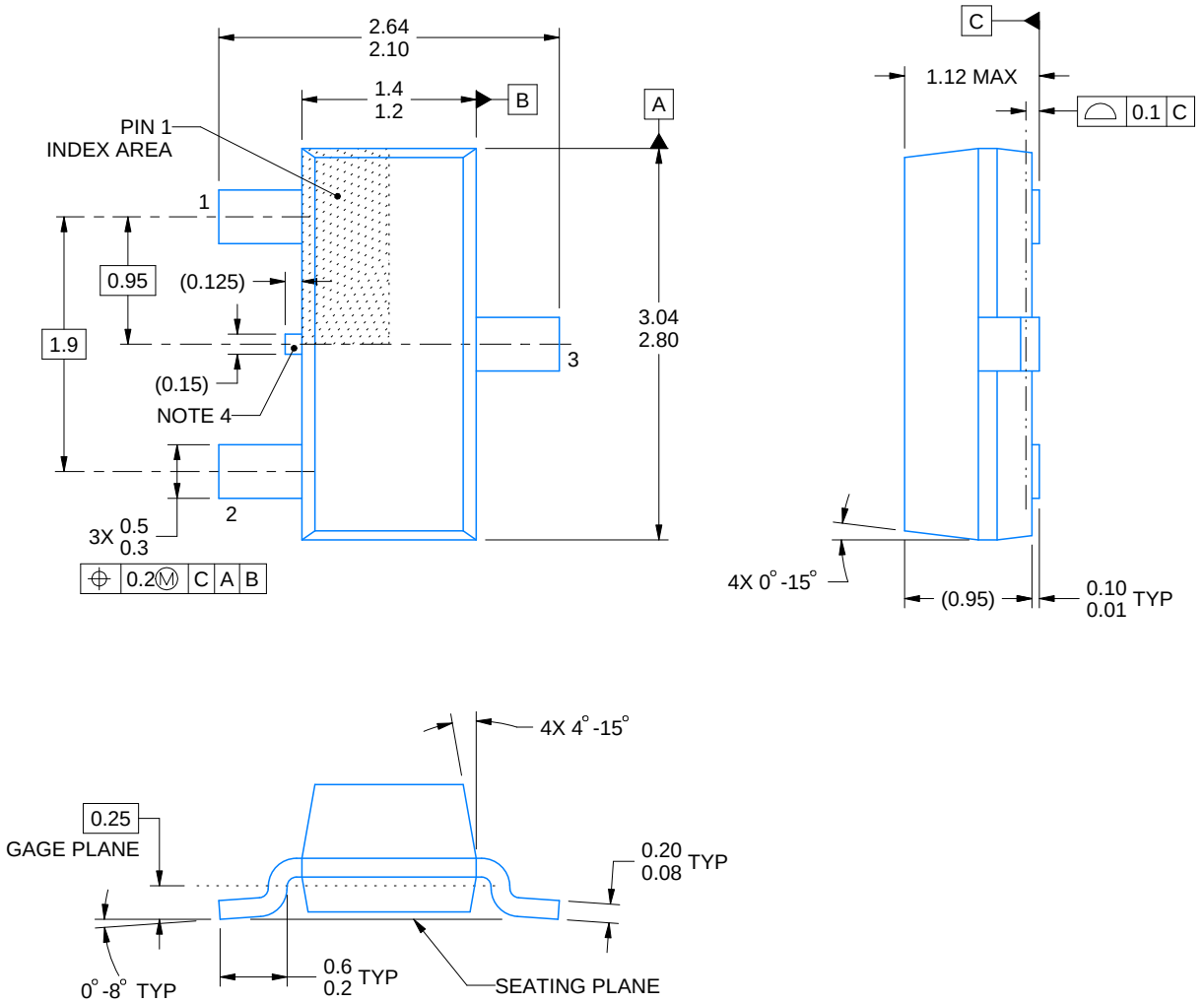

4214838/F 08/2024

NOTES:

1. All linear dimensions are in millimeters. Any dimensions in parenthesis are for reference only. Dimensioning and tolerancing per ASME Y14.5M.
2. This drawing is subject to change without notice.
3. Reference JEDEC registration TO-236, except minimum foot length.
4. Support pin may differ or may not be present.
5. Body dimensions do not include mold flash, protrusions, or gate burrs. Mold flash, protrusions, or gate burrs shall not exceed 0.25mm per side

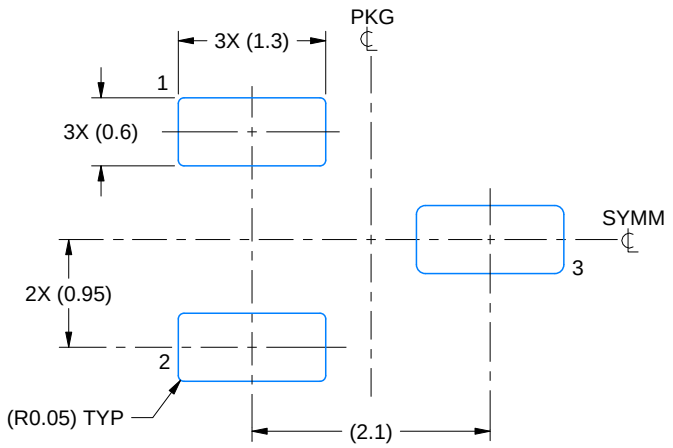

LAND PATTERN EXAMPLE
SCALE:15X

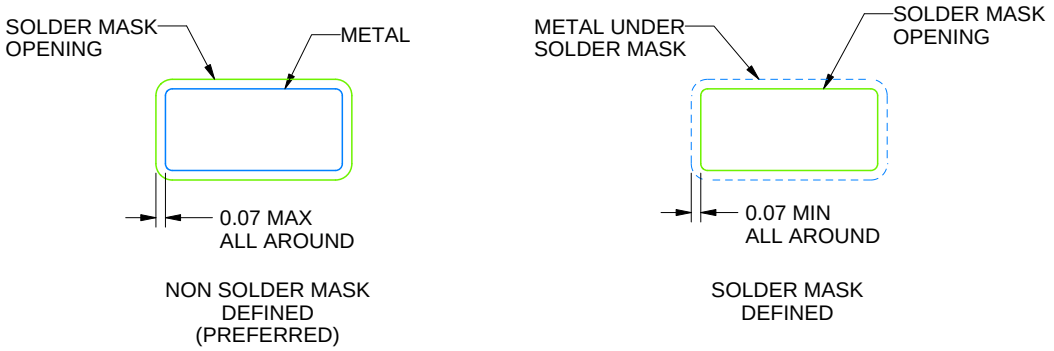

SOLDER MASK DETAILS

4214838/F 08/2024

NOTES: (continued)

5. Publication IPC-7351 may have alternate designs.
6. Solder mask tolerances between and around signal pads can vary based on board fabrication site.

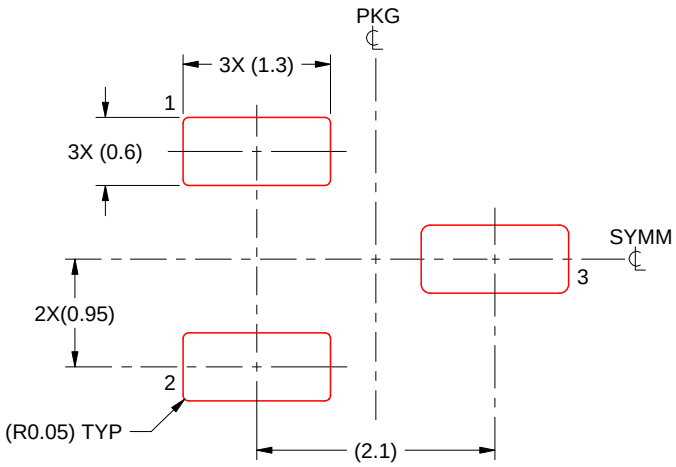

SOLDER PASTE EXAMPLE
BASED ON 0.125 THICK STENCIL
SCALE:15X

4214838/F 08/2024

NOTES: (continued)

7. Laser cutting apertures with trapezoidal walls and rounded corners may offer better paste release. IPC-7525 may have alternate design recommendations.
8. Board assembly site may have different recommendations for stencil design.

重要通知和免责声明

TI“按原样”提供技术和可靠性数据（包括数据表）、设计资源（包括参考设计）、应用或其他设计建议、网络工具、安全信息和其他资源，不保证没有瑕疵且不做出任何明示或暗示的担保，包括但不限于对适销性、与某特定用途的适用性或不侵犯任何第三方知识产权的暗示担保。

这些资源可供使用 TI 产品进行设计的熟练开发人员使用。您将自行承担以下全部责任：(1) 针对您的应用选择合适的 TI 产品，(2) 设计、验证并测试您的应用，(3) 确保您的应用满足相应标准以及任何其他安全、安保法规或其他要求。

这些资源如有变更，恕不另行通知。TI 授权您仅可将这些资源用于研发本资源所述的 TI 产品的相关应用。严禁以其他方式对这些资源进行复制或展示。您无权使用任何其他 TI 知识产权或任何第三方知识产权。对于因您对这些资源的使用而对 TI 及其代表造成的任何索赔、损害、成本、损失和债务，您将全额赔偿，TI 对此概不负责。

TI 提供的产品受 TI 销售条款)、TI 通用质量指南 或 ti.com 上其他适用条款或 TI 产品随附的其他适用条款的约束。TI 提供这些资源并不会扩展或以其他方式更改 TI 针对 TI 产品发布的适用的担保或担保免责声明。 除非德州仪器 (TI) 明确将某产品指定为定制产品或客户特定产品，否则其产品均为按确定价格收入目录的标准通用器件。

TI 反对并拒绝您可能提出的任何其他或不同的条款。

版权所有 © 2026，德州仪器 (TI) 公司

最后更新日期：2025 年 10 月