TPS61322 6.5-µA Quiescent current, 1.8-A switch current boost converter

1 Features

- Operating input voltage range: 0.9 V to 5.5 V
- Output voltage range: 1.8 V to 5.5 V
- 6.5-µA Quiescent current into VOUT pin
- ±3% Output voltage accuracy over temperature
- Minimum switch peak-current limit:
  - 0.42 A for TPS613223A
  - 0.5 A for TPS61322
  - 0.75 A for TPS613221A and TPS613226A
  - 1.10 A for TPS613222A
- Higher than 90% efficiency at 10-mA load from 1.5-V to 2.2-V conversion
- Thermal shutdown protection
- 2.9-mm × 1.3-mm 3-pin SOT package and 2.9-mm × 1.6-mm 5-pin SOT package
- Create a custom design using the TPS61322 with the WEBENCH® Power Designer

2 Applications

- 1-cell to 3-cell Alkaline or NiMH battery-powered applications
- Gaming control
- Tablet
- Portable electronics
- Medical equipment

3 Description

The TPS61322 is a synchronous boost converter with only 6.5-µA quiescent current. The TPS61322 provides a power-supply solution for products powered by alkaline battery, NiMH rechargeable battery, or one-cell Li-ion battery. The boost converter is based on a hysteretic control topology using synchronous rectification to obtain maximum efficiency at minimal quiescent current. The TPS61322 also allows the use of small external inductor and capacitors. Higher than 90% efficiency is achieved at 10-mA load from 1.5-V input to 2.2-V output conversion.

The TPS61322 can also support high output current applications with an external schottky diode. The TPS613222A provides higher than 500-mA output current capability at 3-V input voltage to 5-V output voltage conversion with an external Schottky diode in parallel with the internal rectifier FET.

The output voltage is set internally to a fixed output voltage from 1.8 V to 5.5 V in increments of 0.1 V. Thus, it only needs two external components to get the desired output voltage. The TPS61322 also implements thermal shutdown protection function.

The TPS61322 is available in a 2.9-mm × 1.3-mm 3-pin SOT package or a 2.9-mm × 1.6-mm 5-pin SOT package.

Device Information(1)

PART NUMBER	PACKAGE	BODY SIZE (NOM)
TPS61322	SOT-23 (3)	2.90 mm × 1.30 mm
	SOT-23 (5)	2.90 mm × 1.60 mm

(1) For all available packages, see the orderable addendum at the end of the data sheet.

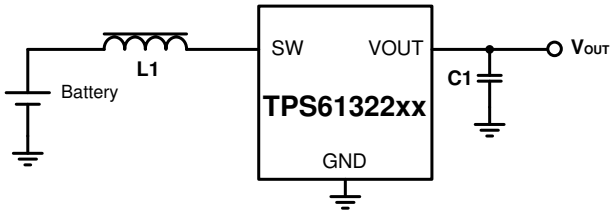

Typical Application Circuit

An IMPORTANT NOTICE at the end of this data sheet addresses availability, warranty, changes, use in safety-critical applications, intellectual property matters and other important disclaimers. PRODUCTION DATA.

Table of Contents

1 Features....1
2 Applications....1
3 Description....1
4 Device Comparison Table....3
5 Pin Configuration and Functions....3
Pin Functions....3
6 Specifications....4
6.1 Absolute Maximum Ratings....4
6.2 ESD Ratings....4
6.3 Recommended Operating Conditions....4
6.4 Thermal Information....4
6.5 Electrical Characteristics....5
6.6 Typical Characteristics....6
7 Detailed Description....9
7.1 Overview....9
7.2 Functional Block Diagram....9
7.3 Feature Description....9
8 Application and Implementation....11
8.1 Application Information....11
8.2 Typical Application....11
8.3 System Examples....19
9 Power Supply Recommendations....20
10 Layout....21
10.1 Layout Guidelines....21
10.2 Layout Examples....22
11 Device and Documentation Support....23
11.1 Device Support....23
11.2 Documentation Support....23
11.3 Receiving Notification of Documentation Updates....23
11.4 Support Resources....23
11.5 Trademarks....23
11.6 Electrostatic Discharge Caution....23
11.7 Glossary....24
12 Revision History....24
13 Mechanical, Packaging, and Orderable Information....24

Copyright © 2024 Texas Instruments Incorporated

4 Device Comparison Table

PART NUMBER	OUTPUT VOLTAGE	TYPICAL CURRENT LIMIT
TPS61322	2.2 V	0.75A
TPS613221A	3.3 V	1.2 A
TPS613222A	5 V	1.8 A
TPS613223A	2 V	0.75 A
TPS613224A(1)	2.5 V	0.75 A
TPS613225A(1)	3 V	1.2 A
TPS613226A	3.6 V	1.2 A

(1) Product Preview. Contact TI factory for more information.

5 Pin Configuration and Functions

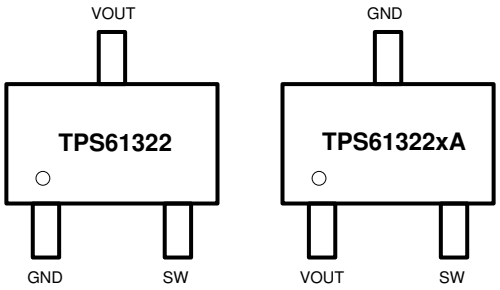

Figure 5-1. DBZ Package 3-Pin SOT Top View

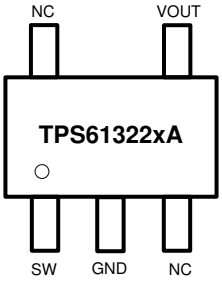

Figure 5-2. DBV Package 5-Pin SOT Top View

Pin Functions

PIN			NAME	TYPE	DESCRIPTION
TPS61322	TPS61322xA				
DBZ	DBZ	DBV			
1	3	2	GND	PWR	Ground of the IC.
2	2	1	SW	PWR	The switch pin of the converter. It is connected to the inductor.
3	1	4	VOUT	PWR	Boost converter output.
-	-	3	NC	-	No connection inside the device.
-	-	5	NC	-	No connection inside the device.

Copyright © 2024 Texas Instruments Incorporated

6 Specifications

6.1 Absolute Maximum Ratings

over operating free-air temperature range (unless otherwise noted)[1]

		MIN	MAX	UNIT
Voltage range at terminals[2]	SW, VOUT	–0.3	6.0	V
Operating Junction Temperature, T_J		–40	150	°C
Storage Temperature, T_{stg}		–65	150	°C

(1) Stresses beyond those listed under *Absolute Maximum Ratings* may cause permanent damage to the device. These are stress ratings only, which do not imply functional operation of the device at these or any other conditions beyond those indicated under *Recommended Operating Conditions*. Exposure to absolute-maximum-rated conditions for extended periods may affect device reliability.
(2) All voltage values are with respect to network ground terminal.

6.2 ESD Ratings

			VALUE	UNIT
$V_{(ESD)}$	Electrostatic discharge	Human-body model (HBM), per ANSI/ESDA/JEDEC JS-001[1]	±2000	V
		Charged-device model (CDM), per JEDEC specification JESD22-C101[2]	±500	

(1) JEDEC document JEP155 states that 500-V HBM allows safe manufacturing with a standard ESD control process.
(2) JEDEC document JEP157 states that 250-V CDM allows safe manufacturing with a standard ESD control process.

6.3 Recommended Operating Conditions

over operating free-air temperature range (unless otherwise noted)

		MIN	NOM	MAX	UNIT
V_{IN}	Input voltage range	0.9		5.5	V
V_{OUT}	Output voltage range	1.8		5.5	V
L	Inductor (effective)	0.7	2.2	13	µH
C_{OUT}	Output capacitor (effective)	4.7	16	100	µF
T_J	Operating junction temperature	-40		125	°C

6.4 Thermal Information

THERMAL METRIC[1]		TPS61322		UNIT
		DBZ (SOT-23)	DBV (SOT-23)	
		3-PIN	5-PIN	
$R_{\theta JA}$	Junction-to-ambient thermal resistance	322.2	189.7	°C/W
$R_{\theta JC(top)}$	Junction-to-case (top) thermal resistance	107.0	109.4	°C/W
$R_{\theta JB}$	Junction-to-board thermal resistance	65.8	56.5	°C/W
ψ_{JT}	Junction-to-top characterization parameter	7.5	33.3	°C/W
ψ_{JB}	Junction-to-board characterization parameter	64.5	56.5	°C/W
$R_{\theta JC(bot)}$	Junction-to-case (bottom) thermal resistance	N/A	N/A	°C/W

(1) For more information about traditional and new thermal metrics, see the *Semiconductor and IC Package Thermal Metrics* application report.

Copyright © 2024 Texas Instruments Incorporated

6.5 Electrical Characteristics

T_J = –40°C to +125°C and V_{IN} = 0.9 V to 5.5 V. Typical values are at V_{IN} = 1.2 V, T_J = 25°C, unless otherwise noted

PARAMETER			TEST CONDITIONS	MIN	TYP	MAX	UNIT
POWER SUPPLY							
V_{IN}	Input voltage range			0.9		5.5	V
V_{VOUT_START}	Minimum voltage for startup at VOUT pin		R_{Load} ≥ 250Ω ,T_J =-40°C to 85°C		0.83	0.87	V
I_Q	Quiescent current into VOUT pin		VOUT = 1.2×Target		6.5	10	uA
OUTPUT							
V_{OUT}		TPS61322	V_{IN} < V_{OUT}, T_J =-40°C to 125°C	2.134	2.2	2.266	V
		TPS613221A	V_{IN} < V_{OUT}, T_J =-40°C to 125°C	3.2	3.3	3.4	V
		TPS613222A	V_{IN} < V_{OUT}, T_J =-40°C to 125°C	4.85	5.0	5.15	V
		TPS613223A	V_{IN} < V_{OUT}, T_J =-40°C to 125°C	1.94	2.0	2.06	V
		TPS613226A	V_{IN} < V_{OUT}, T_J =-40°C to 125°C	3.49	3.6	3.71	V
I_{SW_LKG}	Leakage current into SW pin		V_{SW} = V_{OUT} = 1.2×Target		3.5		nA
POWER SWITCH							
$R_{DS(on)_LS}$	Low side switch on resistance	TPS61322			300		mΩ
		TPS613221A			200		mΩ
		TPS613222A			150		mΩ
		TPS613223A			400		mΩ
		TPS613226A			190		mΩ
$R_{DS(on)_HS}$	High side switch on resistance	TPS61322			1300		mΩ
		TPS613221A			1000		mΩ
		TPS613222A			750		mΩ
		TPS613223A			1680		mΩ
		TPS613226A			950		mΩ
I_{LIM}	Peak switch current limit	TPS61322		0.50	0.75	1.20	A
		TPS613221A		0.75	1.20	1.60	A
		TPS613222A		1.10	1.80	2.50	A
		TPS613223A		0.42	0.75	1.2	A
		TPS613226A		0.75	1.20	1.60	A
Protection							
T_{SD}	Over-temperature protection		T_J rising		150		°C
T_{SD_HYS}	Over-temperature protection hysteresis				20		°C

Copyright © 2024 Texas Instruments Incorporated

6.6 Typical Characteristics

T_J = 25°C unless otherwise noted.

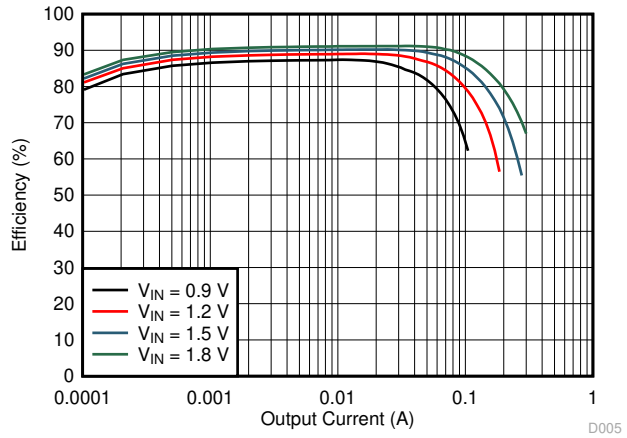

TPS61322 L = 4.7 µH

Figure 6-1. Load Efficiency with Different Inputs

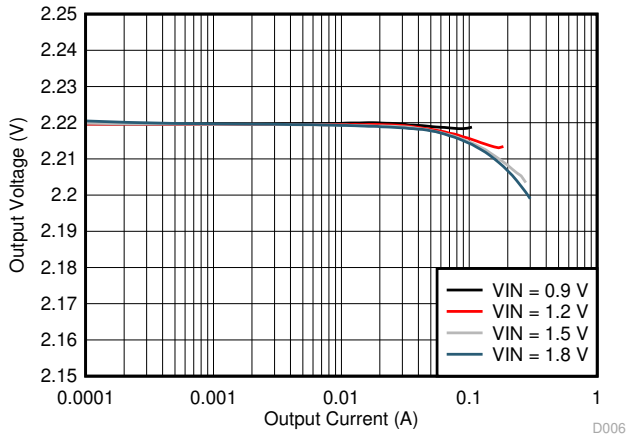

TPS61322 L = 4.7 µH

Figure 6-2. Load Regulation

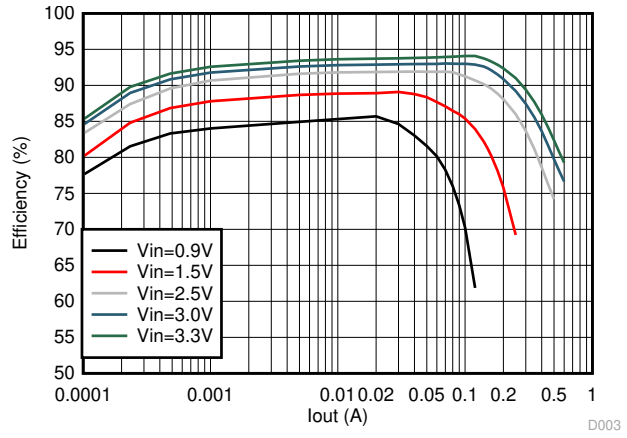

TPS613221A L = 2.2 µH

Figure 6-3. Load Efficiency with Different Inputs

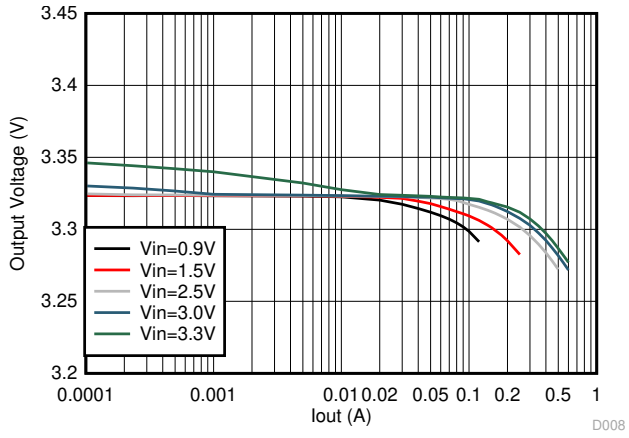

TPS613221A L = 2.2 µH

Figure 6-4. Load Regulation

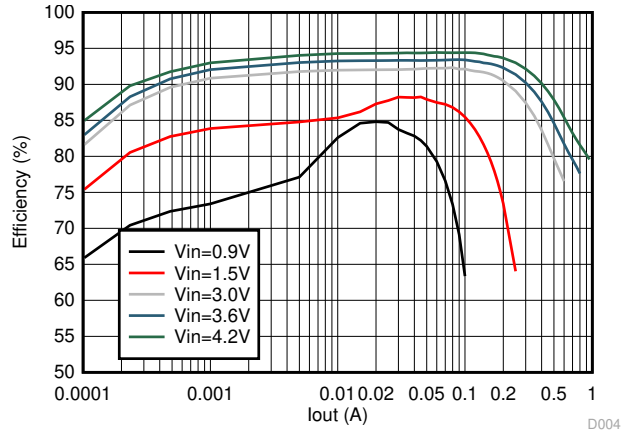

TPS613222A L = 2.2 µH

Figure 6-5. Load Efficiency with Different Inputs

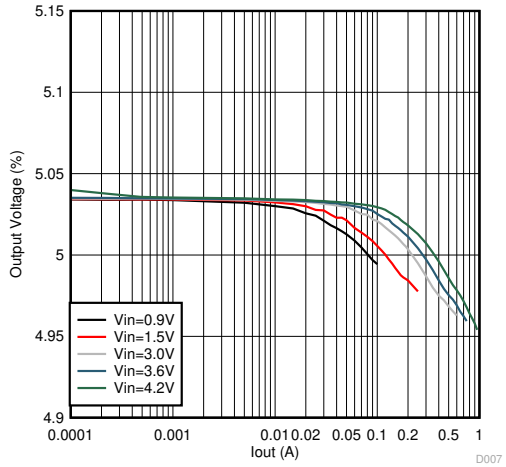

TPS613222A L = 2.2 µH

Figure 6-6. Load Regulation

Copyright © 2024 Texas Instruments Incorporated

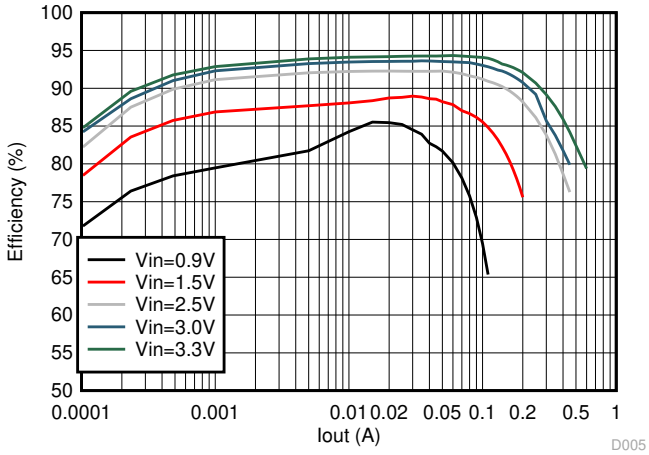

TPS613226A L = 2.2 µH

Figure 6-7. Load Efficiency with Different Inputs

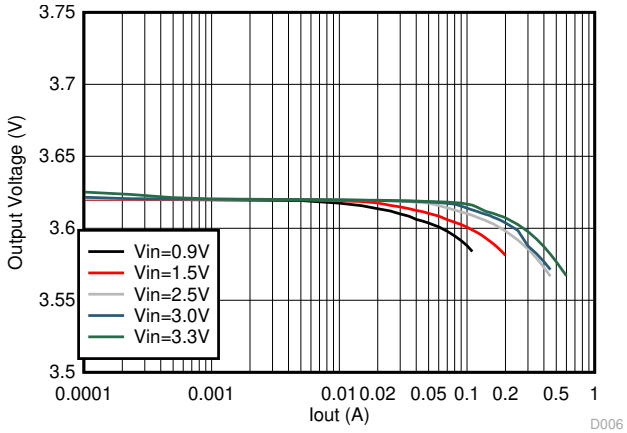

TPS613226A L = 2.2 µH

Figure 6-8. Load Regulation

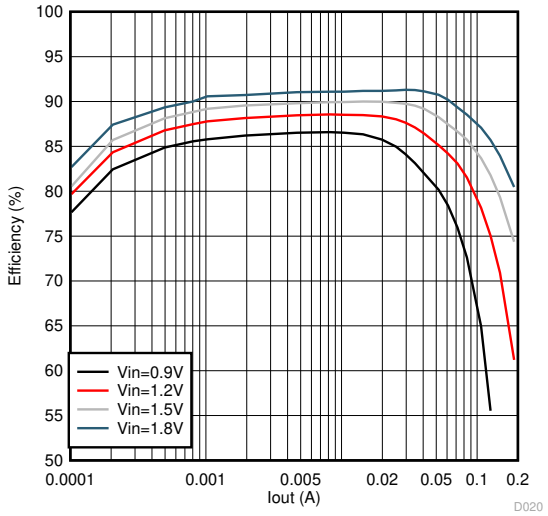

TPS613223A L = 4.7 µH

Figure 6-9. Load Efficiency with Different Inputs

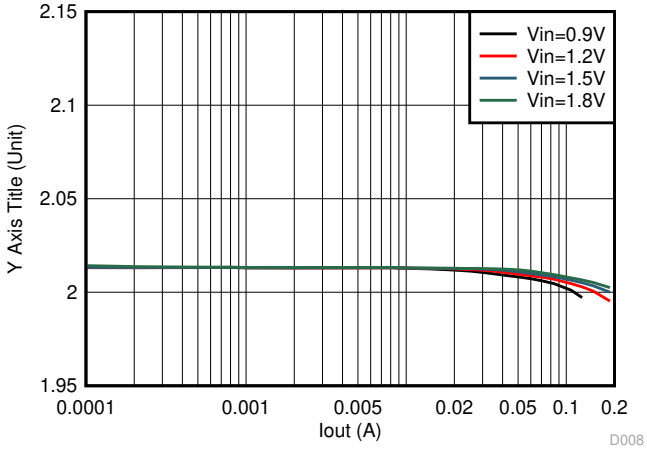

TPS613223A L = 4.7 µH

Figure 6-10. Load Regulation

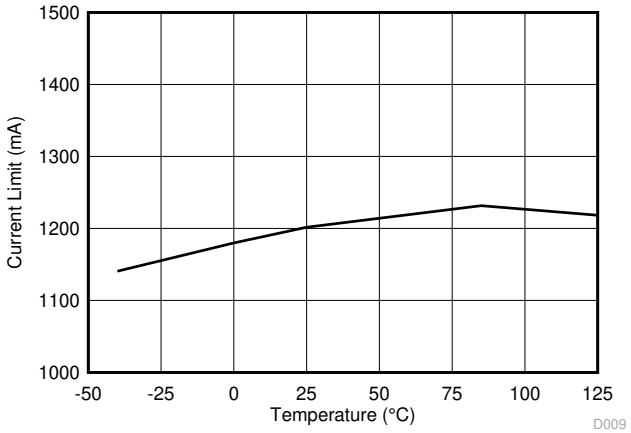

TPS613221A L = 2.2 µH

Figure 6-11. Current Limit with Different Temperature

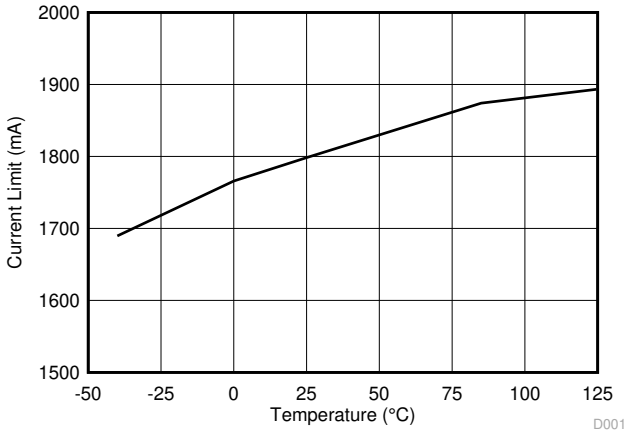

TPS613222A L = 2.2 µH

Figure 6-12. Current Limit with Different Temperature

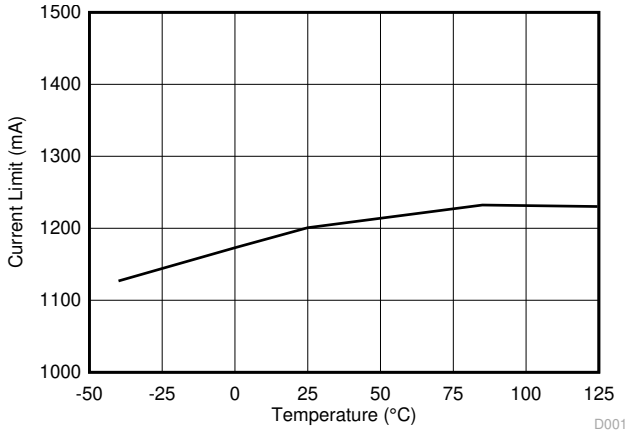

TPS613226A L = 2.2 µH

Figure 6-13. Current Limit with Different Temperature

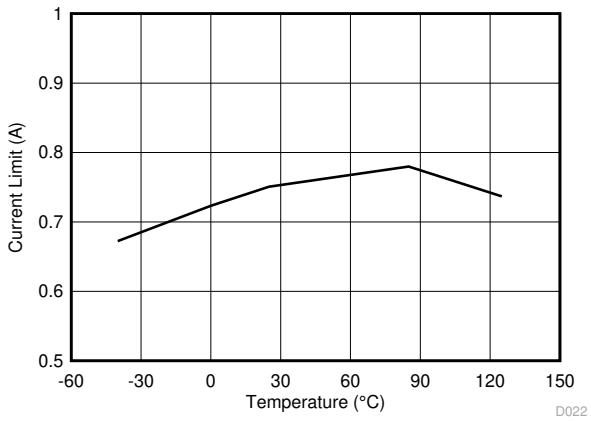

TPS613223A L = 4.7 µH

Figure 6-14. Current Limit with Different Temperature

Copyright © 2024 Texas Instruments Incorporated

7 Detailed Description

7.1 Overview

The TPS61322xx is a low quiescent current, high efficiency synchronous boost converter. The TPS61322xx uses hysteretic current control scheme. The TPS61322xx is designed for systems powered by alkaline battery, NiMH rechargeable battery, Li-ion battery or Li-polymer battery. The input voltage range is from 0.9 V to 5.5 V. After start-up is completed, the TPS61322xx can work with the input voltage down to 0.4 V. The TPS61322xx consumes only 6.5-µA quiescent current and achieves high efficiency under light load conditions. The TPS61322xx is designed as an always-on power. Higher than 90% efficiency is achieved under 10-mA load from 1.5-V input voltage to 2.2-V output voltage conversion to extend battery lifetime. The TPS613222A can support as high as 500-mA output current from 3-V input voltage to 5-V output voltage conversion with an external schottky diode in parallel with internal high-side MOSFET.

7.2 Functional Block Diagram

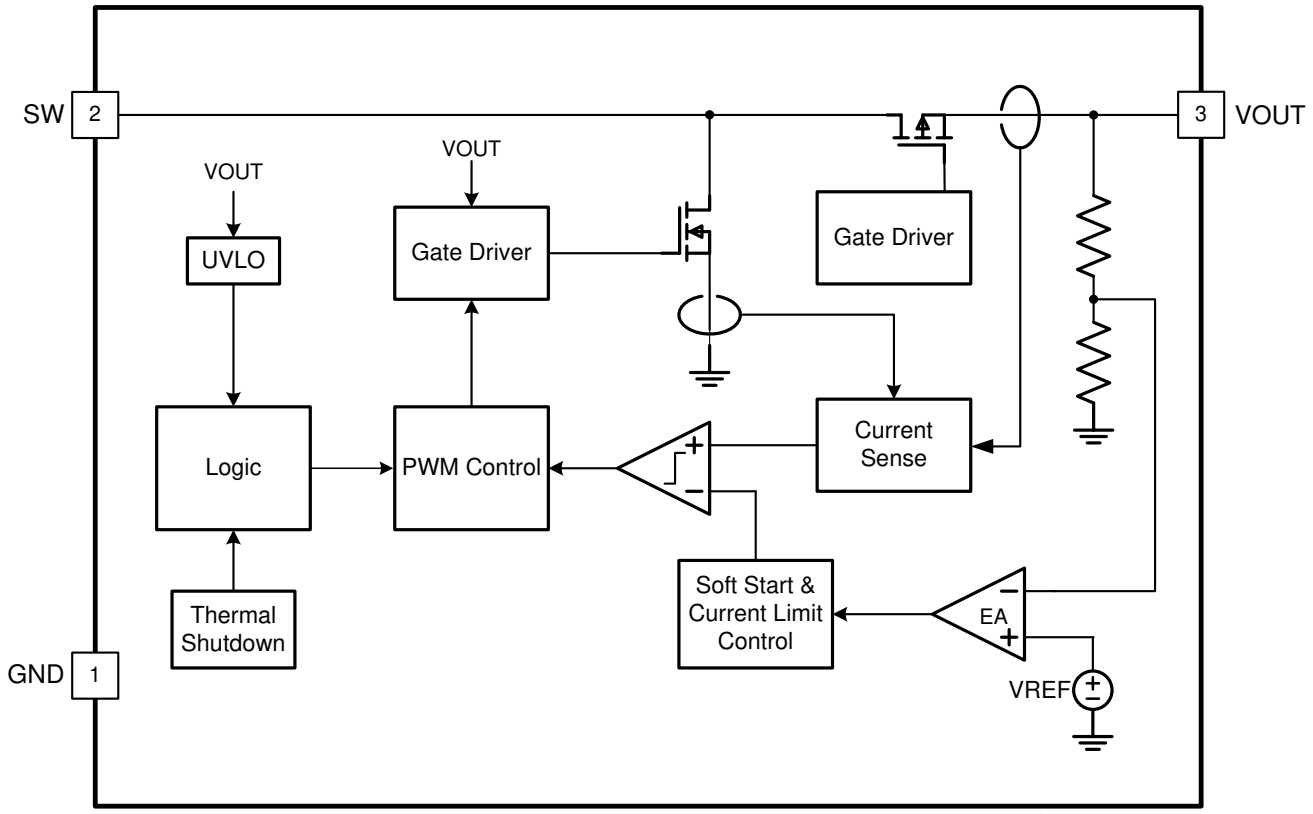

Copyright © 2017, Texas Instruments Incorporated

7.3 Feature Description

7.3.1 Soft Start

When the input voltage is applied, the high side MOSFET is turned on. The input voltage charges the output capacitors through the inductor and the high side MOSFET. When the output capacitors are charged to 0.83-V typical value, the TPS61322xx starts switching at 1.6-MHz fixed frequency and the high-side MOSFET is turned off. When the output voltage goes up to typical 1.6 V, an internal soft-start control circuit ramps the reference voltage to 0.8 V within 2 ms. In this way, the soft-start function reduces the input inrush current. After the output voltage reaches the target value, soft start ends, and the inductor peak current is determined by the output of an internal error amplifier. After start-up, the TPS61322xx can work with the input voltage down to 0.4 V.

7.3.2 Boost Controller Circuit

The TPS61322xx boost converter is controlled by a hysteretic current mode scheme. The TPS61322xx regulates the output voltage by keeping the inductor ripple constant of 200-mA typical value and adjusting the offset of

this inductor current depending on the output load. If the required average input current is lower than average inductor current defined by this constant ripple current, the inductor current becomes discontinuous to keep the efficiency high under light load conditions. Figure 7-1 illustrates the hysteretic current operation.

The output voltage V_{OUT} is monitored via the internal feedback network connected to a voltage error amplifier. To regulate the output voltage, the voltage error amplifier compares this feedback voltage to the internal voltage reference and adjusts the required offset of the inductor current accordingly.

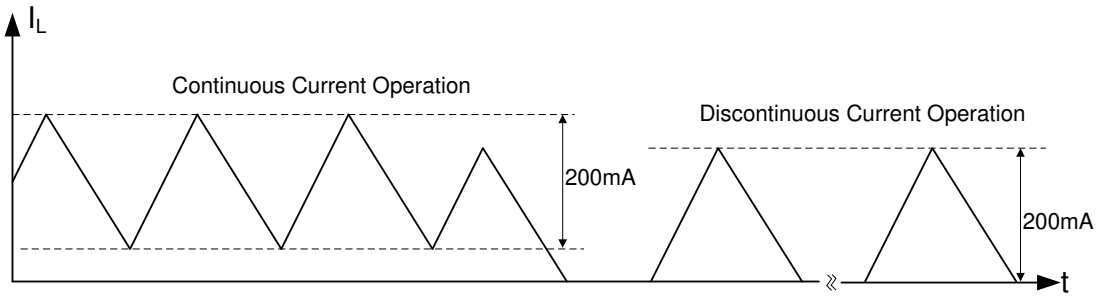

Figure 7-1. Hysteretic Current Operation

7.3.3

The TPS61322xx boost converter can increase the output load capacity by connecting an external schottky diode from SW pin to VOUT pin. Higher than 500 mA output current is supported for 5-V output voltage applications such as USB OTG and HDMI power supply. For such applications, an adaptive constant off time circuit will generate the signal to turn off high-side FET. The inductor current ripple is greater than 200 mA if with this external diode. A higher inductance can help reduce the inductor current ripple.

7.3.4 Undervoltage Lockout

An undervoltage lockout function stops operation of the converter if the input voltage drops below the typical undervoltage lockout threshold of 0.4 V while the output voltage is still higher than 1.8 V. A hysteresis of 100 mV is added so that the device does not switch again until the input voltage goes up to 0.5 V.

7.3.5 Current Limit Operation

The TPS61322xx employs cycle-by-cycle peak current limit operation. If the inductor peak current hits the peak current limit I_{LIM}, the low-side MOSFET is turned off and stops the further increase of the inductor current. In this case the output voltage drops until power balance between the input side and output side is achieved. If the output voltage drops below the input voltage, the inductor current will be clamped by the DCR of the inductor and the on-resistance ($R_{ds,on}$) of the high-side MOSFET.

7.3.6 Overtemperature Protection

The TPS61322xx has a built-in temperature sensor which monitors the internal junction temperature in boost mode operation. If the junction temperature exceeds the threshold 150°C, the device stops operating. As soon as the junction temperature drops below the shutdown temperature minus the hysteresis, typically 130°C, the device starts operating again.

7.3.7 Device Functional Modes

- Section 7.3.2 - Continuous and discontinuous current operation
- Protective mechanisms
  - Section 7.3.5
  - Section 7.3.4
  - Section 7.3.6

Copyright © 2024 Texas Instruments Incorporated

8 Application and Implementation

Note

Information in the following applications sections is not part of the TI component specification, and TI does not warrant its accuracy or completeness. TI's customers are responsible for determining suitability of components for their purposes, as well as validating and testing their design implementation to confirm system functionality.

8.1 Application Information

The TPS61322xx is designed to operates at a wide input voltage range from 0.9-V to 5.5-V. The minimum peak switch current limit is 0.5 A for TPS61322, with 0.75 A for TPS613221A and 1.1 A for TPS613222A. The TPS61322xx supports output voltage from 1.8 V to 5.5 V with increment of 0.1 V, refer to *Section 4* for device details to select the right device for the target applications. Use the following design procedure to select component values for the TPS61322xx.

8.2 Typical Application

8.2.1 Boost without Schottky Diode

A typical application example is the wireless mouse, which normally requires 2.2-V voltage as its supply voltage and consumes less than 50-mA current from one-cell alkaline battery. The following design procedure can be used to select external component values for TPS61322xx.

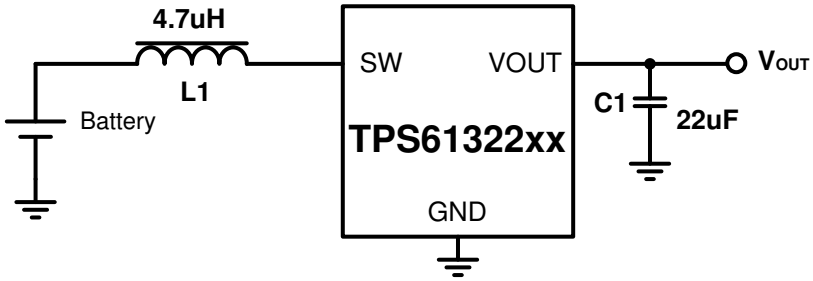

Copyright © 2017, Texas Instruments Incorporated

Figure 8-1. Typical Application Circuit without Schottky Diode

8.2.1.1 Design Requirements

Table 8-1. Design Requirements

PARAMETERS	VALUES
Input voltage	0.9 V to 1.6 V
Output voltage	2.2 V
Output current	50 mA
Output voltage ripple	±10 mV

8.2.1.2 Detailed Design Procedure

8.2.1.2.1 Custom Design With WEBENCH® Tools

Click here to create a custom design using the TPS61322 device with the WEBENCH® Power Designer.

1. Start by entering the input voltage (V_{IN}), output voltage (V_{OUT}), and output current (I_{OUT}) requirements.
2. Optimize the design for key parameters such as efficiency, footprint, and cost using the optimizer dial.
3. Compare the generated design with other possible solutions from Texas Instruments.

The WEBENCH Power Designer provides a customized schematic along with a list of materials with real-time pricing and component availability.

In most cases, these actions are available:

- Run electrical simulations to see important waveforms and circuit performance
- Run thermal simulations to understand board thermal performance
- Export customized schematic and layout into popular CAD formats
- Print PDF reports for the design, and share the design with colleagues

Get more information about WEBENCH tools at www.ti.com/WEBENCH.

8.2.1.2.2 Maximum Output Current

For boost converters, the maximum output current capability is determined by the input to output ratio, the efficiency, the inductor current ripple and the current limit. The maximum output current can be estimated by Equation 1

$$I_{OUT\ (\max)} = \frac{V_{IN} \times (I_{LIM} - \frac{I_{LH}}{2}) \times \eta}{V_{OUT}} \tag{1}$$

where

- I_{LIM} is the peak inductor current limit
- I_{LH} is the inductor current ripple
- η is the boost converter power convert efficiency

Minimum input voltage, maximum boost output voltage and minimum current limit should be used as the worst case condition for the estimation.

In this example, assume the power efficiency is 70% at the minimum input voltage of 0.9 V. The calculated maximum output current is 114 mA, which satisfies the application requirements.

8.2.1.2.3 Inductor Selection

Because the inductor affects steady state operation, transient behavior, and loop stability, the inductor is the most important component in power regulator design. There are three important inductor specifications, inductor value, saturation current, and dc resistance (DCR).

The TPS61322xx is optimized to work with inductor values between 0.7 µH and 13 µH. The inductor values affect the switching frequency. The estimated switching frequency in continuous conduction mode(CCM) can be calculated by Equation 2. The switching frequency f_{SW} is not a constant value, which is determined by the inductance, the inductor current ripple, the input voltage and the output voltage. The current ripple I_{LH} is fixed to 200 mA typically, but it can be affected by the inductor value indirectly. Normally when a smaller inductor value is applied, the inductor current ramps up and down more quickly. The current ripple becomes bigger because the internal current comparator has delay to respond. If a smaller inductor peak current is required in applications, a higher inductor value can be used. However, The inductor and output capacitor must be considered together for the loop stability. The output capacitor and the inductance will influence the bandwidth and phase margin of the converter. Consequently, with a larger inductor, a bigger capacitor normally must be used to ensure the same L/C ratio for a stable loop. For best stability consideration, a 4.7-µH inductor is recommended for 2.2-V output voltage application.

Copyright © 2024 Texas Instruments Incorporated

$$f_{SW} = \frac{V_{IN} \times (V_{OUT} - V_{IN} \times \eta)}{L \times I_{LH} \times V_{OUT}} \tag{2}$$

where

- f_{SW} is the switching frequency of the converter
- I_{LH} is the inductor current ripple
- η is the boost converter power convert efficiency

Having selected the inductance value, follow Equation 3 to Equation 5 to calculate the inductor's peak current for the application. Depending on different load conditions, the TPS61322xx works in continuous current mode or discontinuous conduction mode(DCM). In different modes, the peak currents of the inductor are also different. Equation 3 provides an easy way to estimate whether the device works in CCM or DCM. Equation 4 shows the peak current when the device works in CCM and Equation 5 shows the peak current when the device works in DCM.

$$\frac{V_{OUT} \times I_{OUT}}{V_{IN} \times \eta} > \frac{I_{LH}}{2} \tag{3}$$

where

- I_{LH} is the inductor current ripple
- η is the boost converter power convert efficiency

$$I_{L,peak} = \frac{V_{OUT} \times I_{OUT}}{V_{IN} \times \eta} + \frac{I_{LH}}{2} \tag{4}$$

where

- $I_{L,peak}$ is the peak current of the inductor
- I_{LH} is the inductor current ripple
- η is the boost converter power convert efficiency

$$I_{L,peak} = I_{LH} \tag{5}$$

where

- $I_{L,peak}$ is the peak inductor.
- I_{LH} is the inductor current ripple

The saturation current of the inductor must be higher than the calculated peak inductor current, otherwise the excessive peak current in the inductor harms the device and reduces the system reliability.

8.2.1.2.4

In this example, the maximum load for the boost converter is 50 mA, the minimum input voltage is 0.9 V, and the efficiency under this condition can be estimated at 80%, so the boost converter works in continuous operation mode by the calculation. The inductor peak current is calculated as 258 mA. To have some margin, a 4.7-µH inductor with at least 300 mA saturation current is recommended for this application. A 10-µH inductor can be used as well by increasing the output capacitance to higher than 22 µF to make the loop stable. Table 8-2 lists the recommended inductors for TPS61322xx device.

Table 8-2. List of Inductors

INDUCTANCE [µH]	SATURATION CURRENT [A]	DC RESISTANCE [mΩ]	SIZE (L×W×H)(mm)	PART NUMBER	MANUFACTURER(1)
4.7	1.7	165	2.5 × 2 × 1.2	DFE252012P-4R7M=P2	MURATA
4.7	1.5	141	3 × 3 × 1.5	74438335047	Wurth

Table 8-2. List of Inductors (continued)

INDUCTANCE [µH]	SATURATION CURRENT [A]	DC RESISTANCE [mΩ]	SIZE (L×W×H)(mm)	PART NUMBER	MANUFACTURER(1)
4.7	1.5	209	2.5 × 2 × 1.2	SDEM25201B-4R7MS	CYNTEC

(1) See *Third-party Products Disclaimer*

8.2.1.2.5 Capacitor Selection

For better output voltage filtering, TI recommends low ESR X5R or X7R ceramic capacitors.

For the output capacitor at the VOUT pin, TI recommends small ceramic capacitors. Place the capacitors as close as possible to the VOUT and GND pins of the device to depress the SW spike. The device can normally work with SW negative spike of -0.7V within 1ns. However, larger negative spike may potentially shoot the MOSFET inside. If, for any reason, the application requires the use of large capacitors that cannot be placed close to the device, the use of a small ceramic capacitor with a capacitance value of 1µF in parallel to the large one is recommended. Place this small capacitor as close as possible to the VOUT and GND pins of the device.

Considering loop stability, for inductance of 4.7 µH, the minimal output capacitor value is 10 µF (effective value). Refer to Table 8-3 for inductor and capacitor combination. Increasing the output capacitor makes the output ripple smaller.

When selecting capacitors, ceramic capacitor's derating effect under DC bias voltage must be considered. Choose the right nominal capacitance by checking capacitor's DC bias characteristics. In this example, GRM188R60J106ME84D, which is a 10-µF ceramic capacitor with high effective capacitance value at DC biased condition, is selected for V_{OUT} rail. Two 10-µF capacitors in parallel are recommended to get the desired effective capacitance.

8.2.1.2.6

Table 8-3. List of Inductor and Capacitor

INDUCTANCE [µH]	CAPACITANCE [µF]	LOAD [mA]	PACKAGE	PART NUMBER	MANUFACTURER(1)
1.0	2 × 10	50	0603	GRM188R60J106ME84D	MURATA
2.2	2 × 10	50	0603	GRM188R60J106ME84D	MURATA
4.7	22	50	0805	GRM21BZ71A226ME15	MURATA

(1) See *Third-party Products Disclaimer*

8.2.1.3 Application Curves

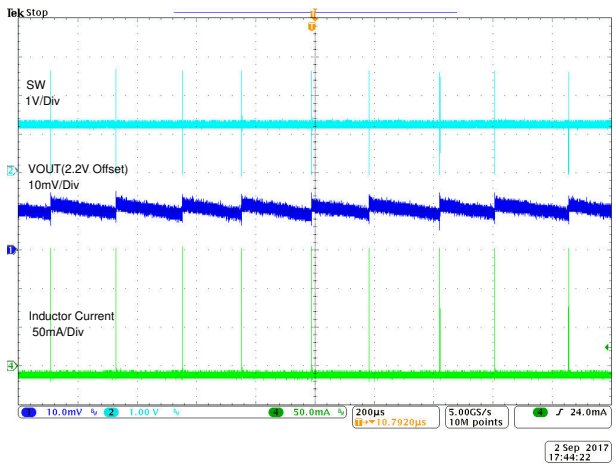

V_{IN} = 1.2V TPS61322 I_{OUT} = 0.1 mA

Figure 8-2. Switching Waveform at Light Load

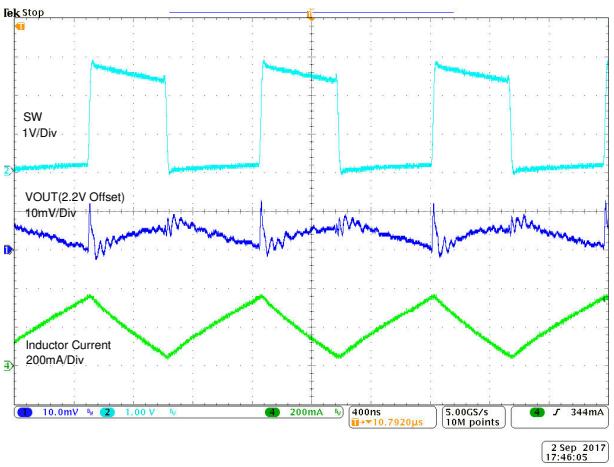

V_{IN} = 1.2 V TPS61322 I_{OUT} = 50 mA

Figure 8-3. Switching Waveform at Heavy Load

Copyright © 2024 Texas Instruments Incorporated

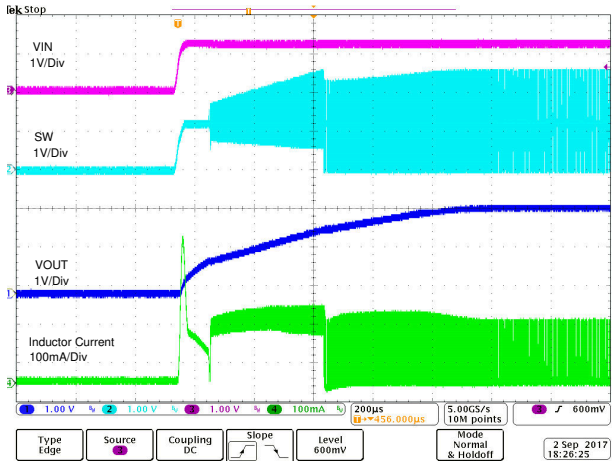

V_{IN} = 1.2 V TPS61322 R_{load} = 250 Ω

Figure 8-4. Start-up by VIN

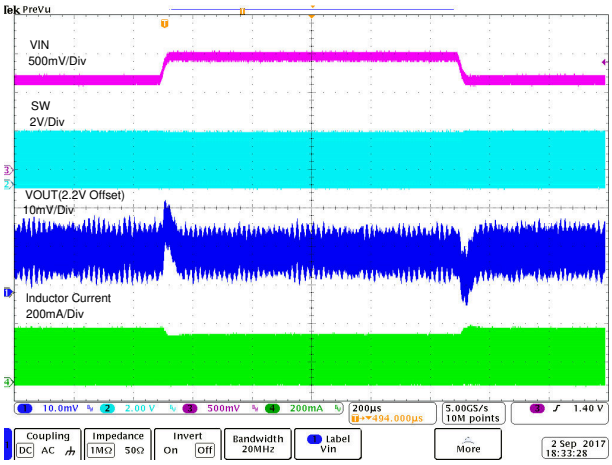

V_{IN} = 1.2 V to 1.5 V TPS61322 I_{OUT} = 50 mA

Figure 8-5. Line Transient

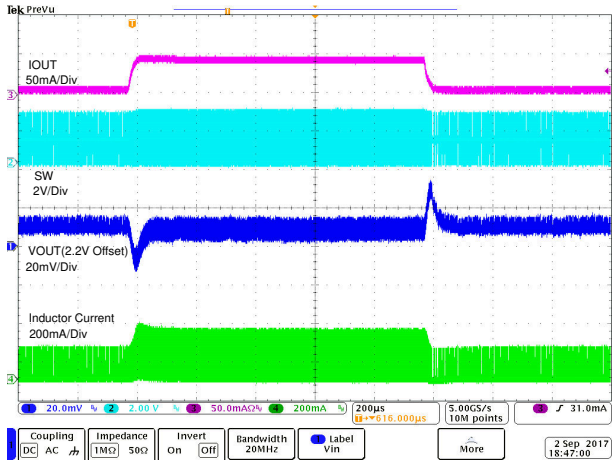

V_{IN} = 1.2 V TPS61322 I_{OUT} = 10 mA to 50 mA

Figure 8-6. Load Transient

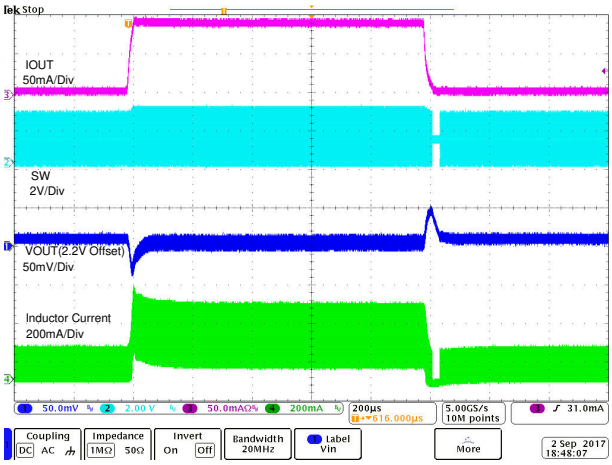

V_{IN} = 1.2 V TPS61322 I_{OUT} = 10 mA to 100 mA

Figure 8-7. Load Transient

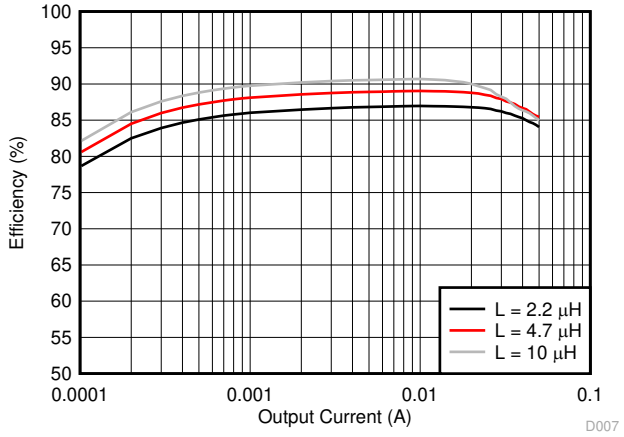

Wurth Electronics, 74438335XXX family 2.2 µH, 4.7 µH, 10 µH V_{IN} = 1.2 V TPS61322

Figure 8-8. Efficiency with Different Inductance

8.2.2 Boost with Schottky Diode

Another typical application example is the USB OTG which normally requires 5-V output as its supply voltage and consumes as high as 500-mA current. The following design procedure can be used to select external component values for this application.

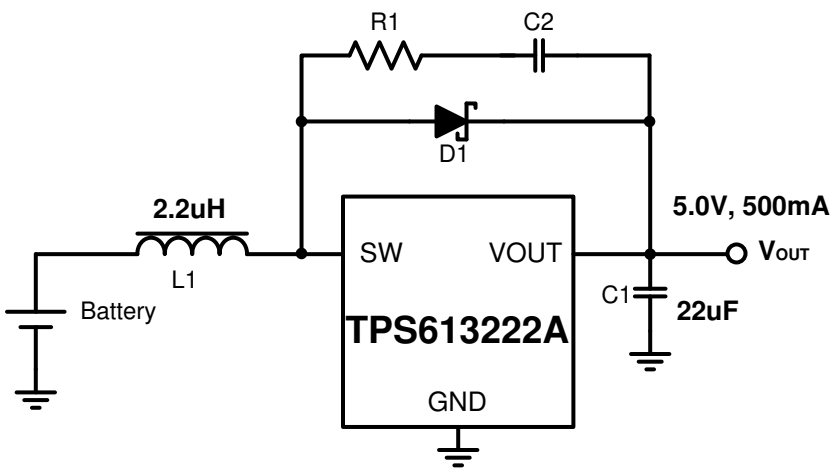

Figure 8-9. Typical Application Circuit with Schottky Diode

8.2.2.1 Design Requirements

Table 8-4. Design Requirements

PARAMETERS	VALUES
Input voltage	3 V to 4.35 V
Output voltage	5 V
Output vurrent	500 mA
Output voltage ripple	± 25 mV

8.2.2.2 Detailed Design Procedure

8.2.2.2.1 Inductor Selection

The peak current is calculated according to Equation 4 and Equation 5.The saturation current of the inductor must be higher than the calculated peak inductor current.

In this example, the maximum load for the boost converter is 500 mA, and the minimum input voltage is 3 V. Assuming the efficiency under this condition is 90%, and a typical 2.2-µH inductor is adopted in this application, so the boost converter works in continuous operation mode by the calculation. The current ripple is 500mA and the inductor peak current is calculated as 1.18 A. To leave some margin, a 2.2-µH inductor with at least 1.4-A saturation current is recommended for this application.Table 8-5 lists the recommended inductors for TPS613222A device.

Table 8-5. List of Inductors

INDUCTANCE [µH]	SATURATION CURRENT [A]	DC RESISTANCE [mΩ]	SIZE (L×W×H) (mm)	PART NUMBER	MANUFACTURER(1)
2.2	2.3	82	2.5 × 2 × 1.2	DFE252012F-2R2M	MURATA
2.2	2.4	89	2.5 × 2 × 1	HMLQ25201T-2R2MSR	CYNTEC
2.2	2.5	75	3.2 × 2.5 × 1.2	HMME32251B--2R2MS	CYNTEC

(1) See *Third-party Products Disclaimer*

Copyright © 2024 Texas Instruments Incorporated

8.2.2.2.2 Schottky Diode Selection

The high switching frequency of TPS61322xx demands a high-speed rectifying switch for optimum efficiency. Ensure that the average and peak current rating of the diode exceeds the average output current and peak inductor current. In addition, the reverse breakdown voltage of the diode must exceed the maximum output voltage of the converter. A snubber circuit consisting of a resistor R1 and a capacitor C2 is needed if the Schottky diode D1 is soldered. The capacitance of C2 must be larger than triple times of the diode capacitance. The typical value of the resistor R1 is 5 Ω, and the typical value of the capacitor C2 is 120 pF.

8.2.2.2.3 Capacitor Selection

Refer to *Section 8.2.1.2.5* for the detailed design steps.Table 8-6 lists the recommended inductor and capacitor combination. Three 10-µF capacitors in parallel are recommended to get the desired effective capacitance.

Table 8-6. List of Inductor and Capacitor

INDUCTANCE [µH]	CAPACITANCE [µF]	LOAD [mA]	PACKAGE	PART NUMBER	MANUFACTURER(1)
1	3 × 10	500	0603	GRM188R60J106ME84D	MURATA
2.2	3 × 10	500	0603	GRM188R60J106ME84D	MURATA
4.7	2 × 22	500	0805	GRM21BZ71A226ME15	MURATA

(1) See *Third-party Products Disclaimer*

8.2.2.3 Application Curves

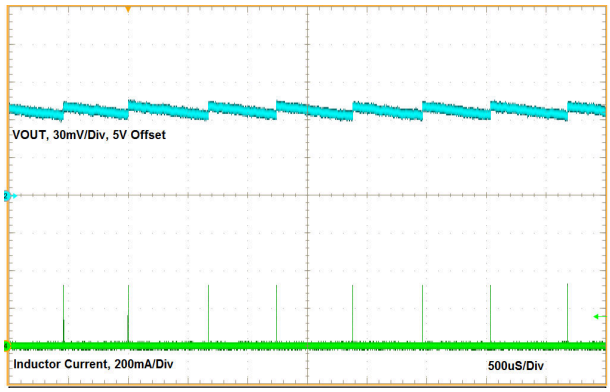

V_{IN} = 3.6 V TPS613222A I_{OUT} = 0.1 mA

Figure 8-10. Switching Waveform at Light Load

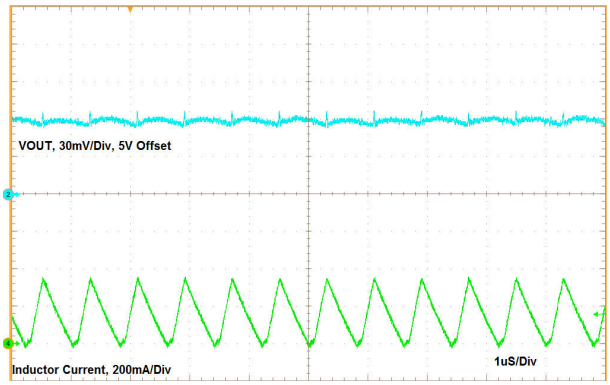

V_{IN} = 3.6 V TPS613222A I_{OUT} = 100 mA

Figure 8-11. Switching Waveform at Heavy Load

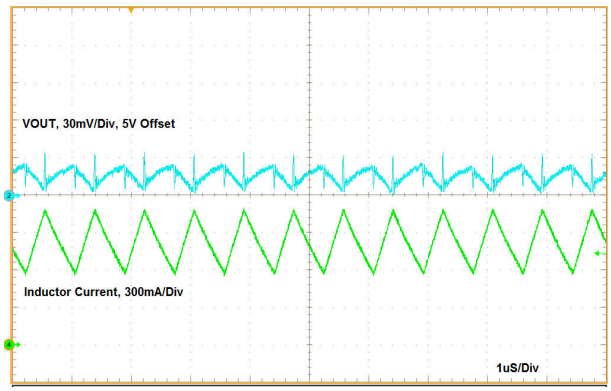

V_{IN} = 3.6 V TPS613222A I_{OUT} = 500 mA

Figure 8-12. Switching Waveform at Heavy Load

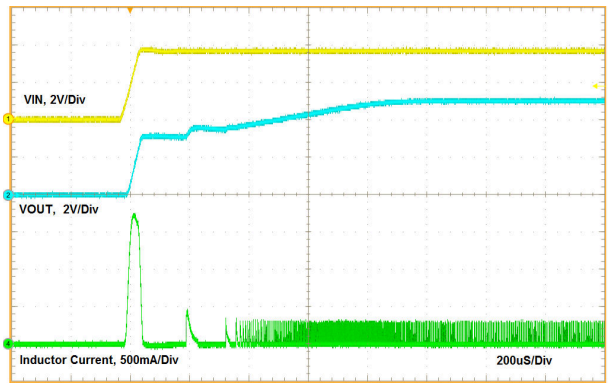

V_{IN} = 3.6 V TPS613222A R_{load} = 250 Ω

Figure 8-13. Start-up by VIN

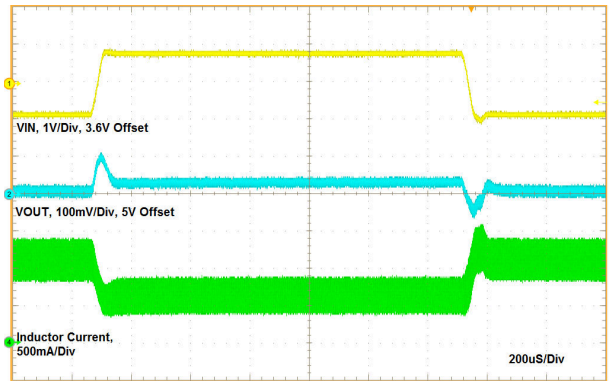

V_{IN} = 2.7 V to 4.3 V TPS613222A I_{OUT} = 500 mA

Figure 8-14. Line Transient

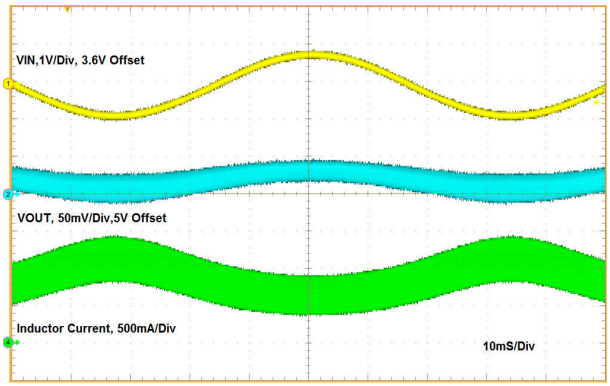

V_{IN} = 2.7 V to 4. V TPS613222A I_{OUT} = 500 mA

Figure 8-15. Line Regulation

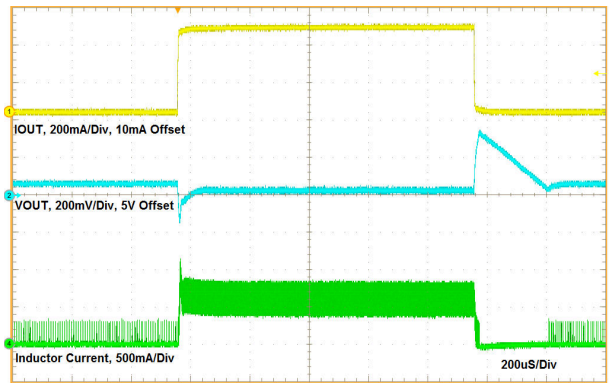

V_{IN} = 3.6 V TPS613222A I_{OUT} = 10 mA to 500 mA

Figure 8-16. Load Transient

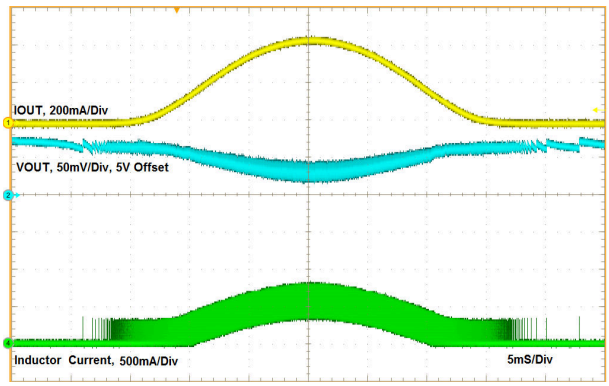

V_{IN} = 3.6 V TPS613222A I_{OUT} = 0 mA to 500 mA

Figure 8-17. Load Regulation

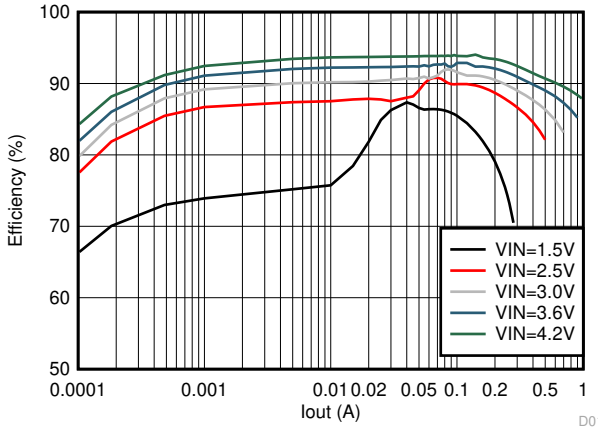

TPS613222A L = 2.2 µH D1:ZLLS410TA

Figure 8-18. Efficiency with Different Input Voltage

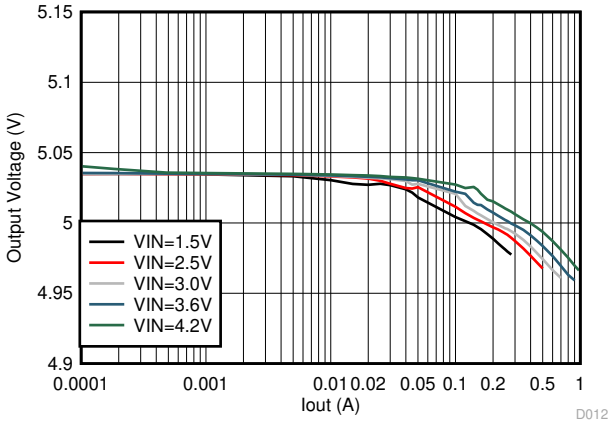

TPS613222A L = 2.2 µH D1:ZLLS410TA

Figure 8-19. Load Regulation

Copyright © 2024 Texas Instruments Incorporated

8.3 System Examples

TPS61322xx can be easily shut down with an external switch Q1 as shown in Figure 8-20. The switch can be mechanical switch, a P-channel MOSFET, or a PNP transistor. For a mechanical switch, there is no control logic circuit needed to turn on or turn off the switch.

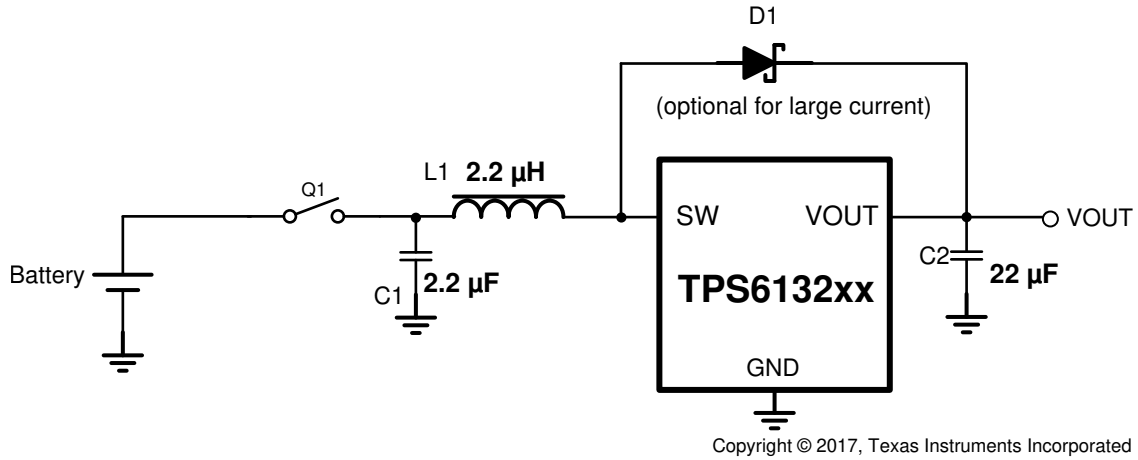

Figure 8-20. True Shutdown for TPS61322xx

8.3.1 Detail Design Schematics

The Figure 8-21 shows the application circuit when the power supply of the micro controller unit (MCU) is not less than the battery voltage. The Figure 8-22 shows the application circuit when the power supply of the micro controller unit (MCU) is less than the battery voltage

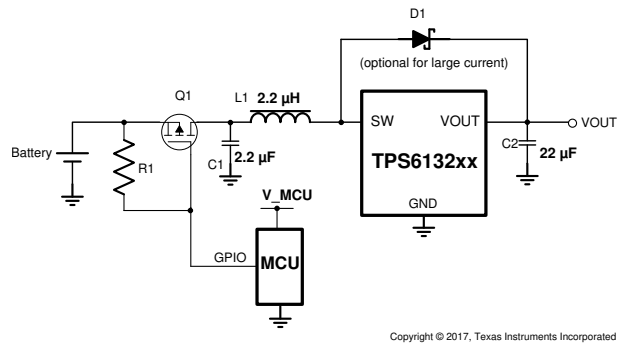

Figure 8-21. True Shutdown, V_MCU Voltage No Less than Battery Voltage

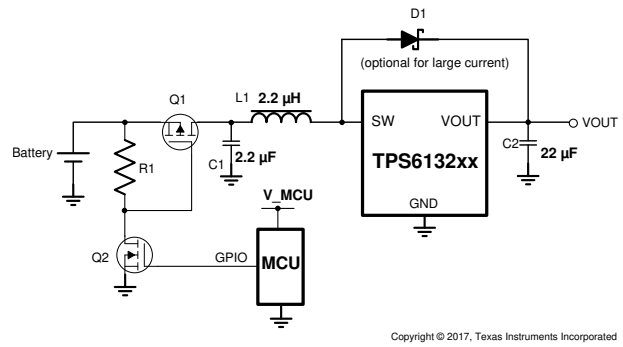

Figure 8-22. True Shutdown, V_MCU Voltage Less than Battery Voltage

9 Power Supply Recommendations

The TPS61322xx is designed to operate from an input voltage supply range between 0.9 V to 5.5 V. The power supply can be alkaline battery, NiMH rechargeable battery, Li-Mn battery or rechargeable Li-ion battery. The input supply must be well regulated with the rating of the TPS61322xx.

Copyright © 2024 Texas Instruments Incorporated

10 Layout

10.1 Layout Guidelines

As for all switching power supplies, the layout is an important step in the design, especially at high peak currents and high switching frequencies. If the layout is not carefully done, the regulator could show stability problems as well as EMI problems. Therefore, use wide and short traces for the main current path and for the power ground paths. Place the output capacitor, as well as the inductor, as close as possible to the device.

Copyright © 2024 Texas Instruments Incorporated

10.2 Layout Examples

A large ground plane on the top and bottom is good for thermal performance.

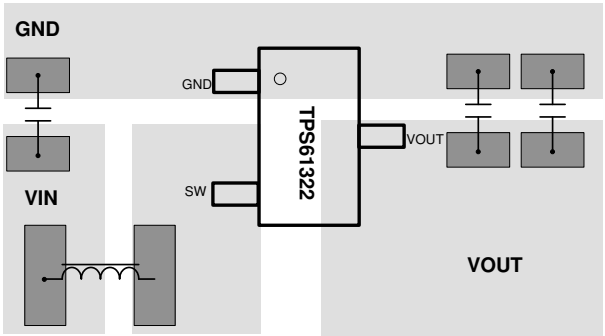

Figure 10-1. TPS61322 Layout

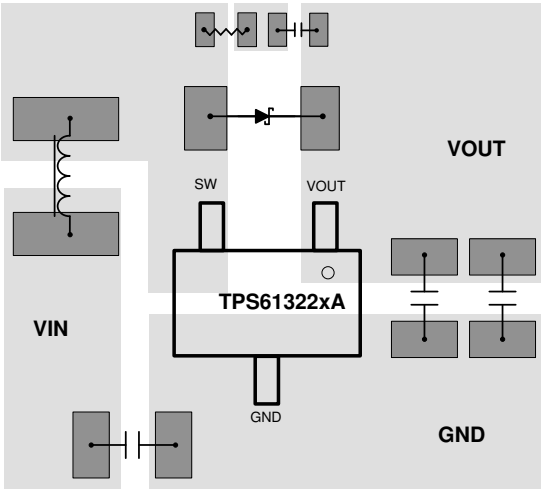

Figure 10-2. TPS61322xA DBZ Package Layout

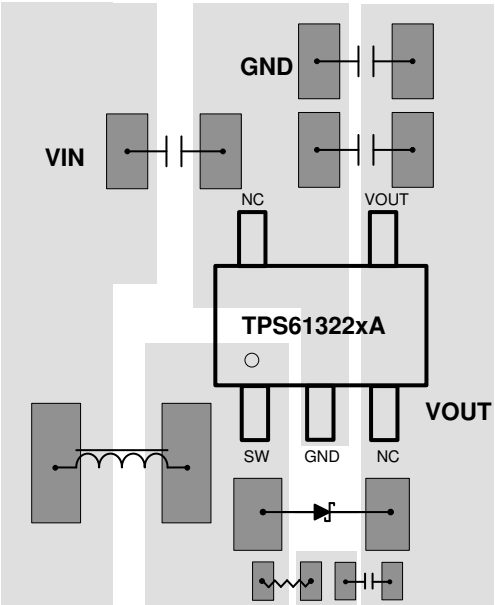

Figure 10-3. TPS61322xA DBV Package Layout

Copyright © 2024 Texas Instruments Incorporated

11 Device and Documentation Support

11.1 Device Support

11.1.1 Third-Party Products Disclaimer

TI'S PUBLICATION OF INFORMATION REGARDING THIRD-PARTY PRODUCTS OR SERVICES DOES NOT CONSTITUTE AN ENDORSEMENT REGARDING THE SUITABILITY OF SUCH PRODUCTS OR SERVICES OR A WARRANTY, REPRESENTATION OR ENDORSEMENT OF SUCH PRODUCTS OR SERVICES, EITHER ALONE OR IN COMBINATION WITH ANY TI PRODUCT OR SERVICE.

11.1.2 Development Support

11.1.2.1 Custom Design With WEBENCH® Tools

Click here to create a custom design using the TPS61322 device with the WEBENCH® Power Designer.

1. Start by entering the input voltage (V_{IN}), output voltage (V_{OUT}), and output current (I_{OUT}) requirements.
2. Optimize the design for key parameters such as efficiency, footprint, and cost using the optimizer dial.
3. Compare the generated design with other possible solutions from Texas Instruments.

The WEBENCH Power Designer provides a customized schematic along with a list of materials with real-time pricing and component availability.

In most cases, these actions are available:

- Run electrical simulations to see important waveforms and circuit performance
- Run thermal simulations to understand board thermal performance
- Export customized schematic and layout into popular CAD formats
- Print PDF reports for the design, and share the design with colleagues

Get more information about WEBENCH tools at www.ti.com/WEBENCH.

11.2 Documentation Support

11.2.1 Related Documentation

For related documentation see the following:

TPS61322-BMC001 Evaluation Module User's Guide

11.3 Receiving Notification of Documentation Updates

To receive notification of documentation updates, navigate to the device product folder on ti.com. In the upper right corner, click on *Alert me* to register and receive a weekly digest of any product information that has changed. For change details, review the revision history included in any revised document.

11.4 Support Resources

TI E2E™ support forums are an engineer's go-to source for fast, verified answers and design help — straight from the experts. Search existing answers or ask your own question to get the quick design help you need.

Linked content is provided "AS IS" by the respective contributors. They do not constitute TI specifications and do not necessarily reflect TI's views; see TI's Terms of Use.

11.5 Trademarks

TI E2E™ is a trademark of Texas Instruments.
WEBENCH® is a registered trademark of Texas Instruments.
All trademarks are the property of their respective owners.

11.6 Electrostatic Discharge Caution

This integrated circuit can be damaged by ESD. Texas Instruments recommends that all integrated circuits be handled with appropriate precautions. Failure to observe proper handling and installation procedures can cause damage.

ESD damage can range from subtle performance degradation to complete device failure. Precision integrated circuits may be more susceptible to damage because very small parametric changes could cause the device not to meet its published specifications.

11.7 Glossary

TI Glossary This glossary lists and explains terms, acronyms, and definitions.

12 Revision History

NOTE: Page numbers for previous revisions may differ from page numbers in the current version.

Changes from February 19, 2019 to February 21, 2024 (from Revision D (February 2019) to Revision E (February 2024))	Page
• Updated second paragraph with additional information	14

Changes from Revision C (May 2018) to Revision D (February 2019)	Page
• Deleted quasi-GPNs from TPS61322 title and changed "TPS61322xx" to "TPS61322"	1
• Added links for WEBENCH	1
• Changed the NFET symbol in *Section 7.2*	9
• Added *Section 7.3.7*	10

Changes from Revision B (April 2018) to Revision C (May 2018)	Page
• Deleted Cross Reference to *Section 4* and the Electrical Characteristics table footnotes regarding device TPS61223A, that was *Product Preview* device in the SLVSDY5B revision.	3
• Deleted Cross Reference to *Section 6.5* footnote regarding device TPS61223A, that was *Product Preview* in the SLVSDY5B revision.	5
• Added graphs pertaining to TPS613223A device to the Typical Characteristics matrix.	6

Changes from Revision A (January 2018) to Revision B (April 2018)	Page
• Deleted Cross Reference to *Section 4* and the Electrical Characteristics table footnotes regarding devices TPS61221A, TPS61222A, and TPS61226A that were *Product Preview* devices in the SLVSDY5A revision.	3
• Deleted Cross Reference to *Section 6.5* footnote regarding devices TPS61221A, TPS61222A, and TPS61226A that were *Product Preview* in the SLVSDY5A revision.	5
• Added Figure 6-3, Figure 6-4 and Figure 6-5	6
• Added Figure 6-7, Figure 6-8, and Figure 6-11	6

Changes from Revision * (September 2017) to Revision A (January 2018)	Page
• Production Data release January 2018.	1

13 Mechanical, Packaging, and Orderable Information

The following pages include mechanical, packaging, and orderable information. This information is the most current data available for the designated devices. This data is subject to change without notice and revision of this document. For browser-based versions of this data sheet, refer to the left-hand navigation.

Copyright © 2024 Texas Instruments Incorporated

PACKAGING INFORMATION

Orderable part number	Status (1)	Material type (2)	Package | Pins	Package qty | Carrier	RoHS (3)	Lead finish/ Ball material (4)	MSL rating/ Peak reflow (5)	Op temp (°C)	Part marking (6)
TPS613221ADBVR	Active	Production	SOT-23 (DBV) | 5	3000 | LARGE T&R	Yes	NIPDAU | SN	Level-1-260C-UNLIM	-40 to 125	1N4L
TPS613221ADBVR.B	Active	Production	SOT-23 (DBV) | 5	3000 | LARGE T&R	Yes	SN	Level-1-260C-UNLIM	-40 to 125	1N4L
TPS613221ADBVT	Active	Production	SOT-23 (DBV) | 5	250 | SMALL T&R	Yes	NIPDAU | SN	Level-1-260C-UNLIM	-40 to 125	1N4L
TPS613221ADBVT.B	Active	Production	SOT-23 (DBV) | 5	250 | SMALL T&R	Yes	SN	Level-1-260C-UNLIM	-40 to 125	1N4L
TPS613222ADBVR	Active	Production	SOT-23 (DBV) | 5	3000 | LARGE T&R	Yes	NIPDAU | SN	Level-1-260C-UNLIM	-40 to 125	1N5L
TPS613222ADBVR.B	Active	Production	SOT-23 (DBV) | 5	3000 | LARGE T&R	Yes	NIPDAU	Level-1-260C-UNLIM	-40 to 125	1N5L
TPS613222ADBVT	Active	Production	SOT-23 (DBV) | 5	250 | SMALL T&R	Yes	NIPDAU | SN	Level-1-260C-UNLIM	-40 to 125	1N5L
TPS613222ADBVT.B	Active	Production	SOT-23 (DBV) | 5	250 | SMALL T&R	Yes	SN	Level-1-260C-UNLIM	-40 to 125	1N5L
TPS613222ADBVTG4	Active	Production	SOT-23 (DBV) | 5	250 | SMALL T&R	Yes	NIPDAU	Level-1-260C-UNLIM	-40 to 125	1N5L
TPS613222ADBVTG4.B	Active	Production	SOT-23 (DBV) | 5	250 | SMALL T&R	Yes	NIPDAU	Level-1-260C-UNLIM	-40 to 125	1N5L
TPS613223ADBVR	Active	Production	SOT-23 (DBV) | 5	3000 | LARGE T&R	Yes	NIPDAU | SN	Level-1-260C-UNLIM	-40 to 125	1NRL
TPS613223ADBVR.B	Active	Production	SOT-23 (DBV) | 5	3000 | LARGE T&R	Yes	NIPDAU	Level-1-260C-UNLIM	-40 to 125	1NRL
TPS613223ADBVT	Active	Production	SOT-23 (DBV) | 5	250 | SMALL T&R	Yes	NIPDAU | SN	Level-1-260C-UNLIM	-40 to 125	1NRL
TPS613223ADBVT.B	Active	Production	SOT-23 (DBV) | 5	250 | SMALL T&R	Yes	SN	Level-1-260C-UNLIM	-40 to 125	1NRL
TPS613226ADBVR	Active	Production	SOT-23 (DBV) | 5	3000 | LARGE T&R	Yes	NIPDAU | SN	Level-1-260C-UNLIM	-40 to 125	1N6L
TPS613226ADBVR.B	Active	Production	SOT-23 (DBV) | 5	3000 | LARGE T&R	Yes	NIPDAU	Level-1-260C-UNLIM	-40 to 125	1N6L
TPS613226ADBVT	Active	Production	SOT-23 (DBV) | 5	250 | SMALL T&R	Yes	NIPDAU | SN	Level-1-260C-UNLIM	-40 to 125	1N6L
TPS613226ADBVT.B	Active	Production	SOT-23 (DBV) | 5	250 | SMALL T&R	Yes	SN	Level-1-260C-UNLIM	-40 to 125	1N6L
TPS61322DBZR	Active	Production	SOT-23 (DBZ) | 3	3000 | LARGE T&R	Yes	NIPDAU | SN	Level-1-260C-UNLIM	-40 to 125	1EME
TPS61322DBZR.B	Active	Production	SOT-23 (DBZ) | 3	3000 | LARGE T&R	Yes	NIPDAU	Level-1-260C-UNLIM	-40 to 125	1EME
TPS61322DBZT	Active	Production	SOT-23 (DBZ) | 3	250 | SMALL T&R	Yes	NIPDAU | SN	Level-1-260C-UNLIM	-40 to 125	1EME
TPS61322DBZT.B	Active	Production	SOT-23 (DBZ) | 3	250 | SMALL T&R	Yes	NIPDAU	Level-1-260C-UNLIM	-40 to 125	1EME
XTPS61322DBZT	Obsolete	Preproduction	SOT-23 (DBZ) | 3	-	-	Call TI	Call TI	-40 to 125	

(1) **Status:** For more details on status, see our product life cycle.

(2) **Material type:** When designated, preproduction parts are prototypes/experimental devices, and are not yet approved or released for full production. Testing and final process, including without limitation quality assurance, reliability performance testing, and/or process qualification, may not yet be complete, and this item is subject to further changes or possible discontinuation. If available for ordering, purchases will be subject to an additional waiver at checkout, and are intended for early internal evaluation purposes only. These items are sold without warranties of any kind.

(3) **RoHS values:** Yes, No, RoHS Exempt. See the TI RoHS Statement for additional information and value definition.

(4) **Lead finish/Ball material:** Parts may have multiple material finish options. Finish options are separated by a vertical ruled line. Lead finish/Ball material values may wrap to two lines if the finish value exceeds the maximum column width.

(5) **MSL rating/Peak reflow:** The moisture sensitivity level ratings and peak solder (reflow) temperatures. In the event that a part has multiple moisture sensitivity ratings, only the lowest level per JEDEC standards is shown. Refer to the shipping label for the actual reflow temperature that will be used to mount the part to the printed circuit board.

(6) **Part marking:** There may be an additional marking, which relates to the logo, the lot trace code information, or the environmental category of the part.

Multiple part markings will be inside parentheses. Only one part marking contained in parentheses and separated by a "~" will appear on a part. If a line is indented then it is a continuation of the previous line and the two combined represent the entire part marking for that device.

Important Information and Disclaimer: The information provided on this page represents TI's knowledge and belief as of the date that it is provided. TI bases its knowledge and belief on information provided by third parties, and makes no representation or warranty as to the accuracy of such information. Efforts are underway to better integrate information from third parties. TI has taken and continues to take reasonable steps to provide representative and accurate information but may not have conducted destructive testing or chemical analysis on incoming materials and chemicals. TI and TI suppliers consider certain information to be proprietary, and thus CAS numbers and other limited information may not be available for release.

In no event shall TI's liability arising out of such information exceed the total purchase price of the TI part(s) at issue in this document sold by TI to Customer on an annual basis.

TAPE AND REEL INFORMATION

REEL DIMENSIONS

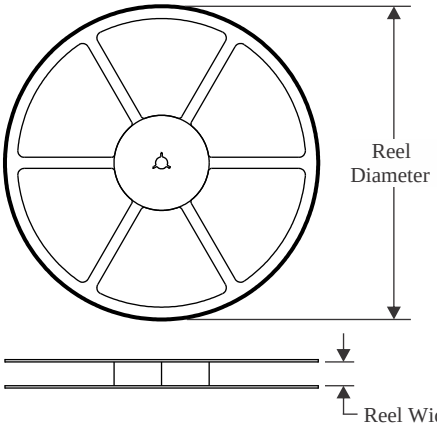

TAPE DIMENSIONS

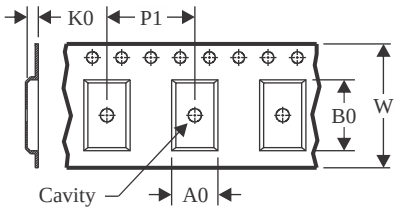

A0	Dimension designed to accommodate the component width
B0	Dimension designed to accommodate the component length
K0	Dimension designed to accommodate the component thickness
W	Overall width of the carrier tape
P1	Pitch between successive cavity centers

QUADRANT ASSIGNMENTS FOR PIN 1 ORIENTATION IN TAPE

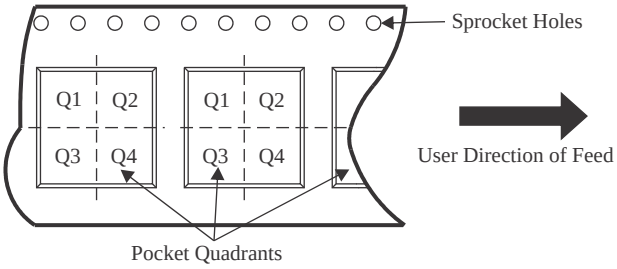

*All dimensions are nominal

Device	Package Type	Package Drawing	Pins	SPQ	Reel Diameter (mm)	Reel Width W1 (mm)	A0 (mm)	B0 (mm)	K0 (mm)	P1 (mm)	W (mm)	Pin1 Quadrant
TPS613221ADBVR	SOT-23	DBV	5	3000	178.0	8.4	3.2	3.2	1.4	4.0	8.0	Q3
TPS613221ADBVT	SOT-23	DBV	5	250	180.0	8.4	3.2	3.2	1.4	4.0	8.0	Q3
TPS613222ADBVR	SOT-23	DBV	5	3000	180.0	8.4	3.2	3.2	1.4	4.0	8.0	Q3
TPS613222ADBVR	SOT-23	DBV	5	3000	180.0	8.4	3.2	3.2	1.4	4.0	8.0	Q3
TPS613222ADBVT	SOT-23	DBV	5	250	180.0	8.4	3.2	3.2	1.4	4.0	8.0	Q3
TPS613222ADBVT	SOT-23	DBV	5	250	180.0	8.4	3.2	3.2	1.4	4.0	8.0	Q3
TPS613222ADBVTG4	SOT-23	DBV	5	250	180.0	8.4	3.2	3.2	1.4	4.0	8.0	Q3
TPS613223ADBVR	SOT-23	DBV	5	3000	180.0	8.4	3.2	3.2	1.4	4.0	8.0	Q3
TPS613223ADBVR	SOT-23	DBV	5	3000	180.0	8.4	3.2	3.2	1.4	4.0	8.0	Q3
TPS613223ADBVT	SOT-23	DBV	5	250	180.0	8.4	3.2	3.2	1.4	4.0	8.0	Q3
TPS613223ADBVT	SOT-23	DBV	5	250	180.0	8.4	3.2	3.2	1.4	4.0	8.0	Q3
TPS613226ADBVR	SOT-23	DBV	5	3000	178.0	8.4	3.2	3.2	1.4	4.0	8.0	Q3
TPS613226ADBVT	SOT-23	DBV	5	250	180.0	8.4	3.2	3.2	1.4	4.0	8.0	Q3
TPS61322DBZR	SOT-23	DBZ	3	3000	180.0	8.4	3.2	2.85	1.3	4.0	8.0	Q3
TPS61322DBZR	SOT-23	DBZ	3	3000	178.0	9.0	3.15	2.77	1.22	4.0	8.0	Q3
TPS61322DBZR	SOT-23	DBZ	3	3000	180.0	8.4	2.9	3.35	1.35	4.0	8.0	Q3

Device	Package Type	Package Drawing	Pins	SPQ	Reel Diameter (mm)	Reel Width W1 (mm)	A0 (mm)	B0 (mm)	K0 (mm)	P1 (mm)	W (mm)	Pin1 Quadrant
TPS61322DBZT	SOT-23	DBZ	3	250	178.0	9.0	3.15	2.77	1.22	4.0	8.0	Q3
TPS61322DBZT	SOT-23	DBZ	3	250	180.0	8.4	3.2	2.85	1.3	4.0	8.0	Q3
TPS61322DBZT	SOT-23	DBZ	3	250	180.0	8.4	2.9	3.35	1.35	4.0	8.0	Q3

TAPE AND REEL BOX DIMENSIONS

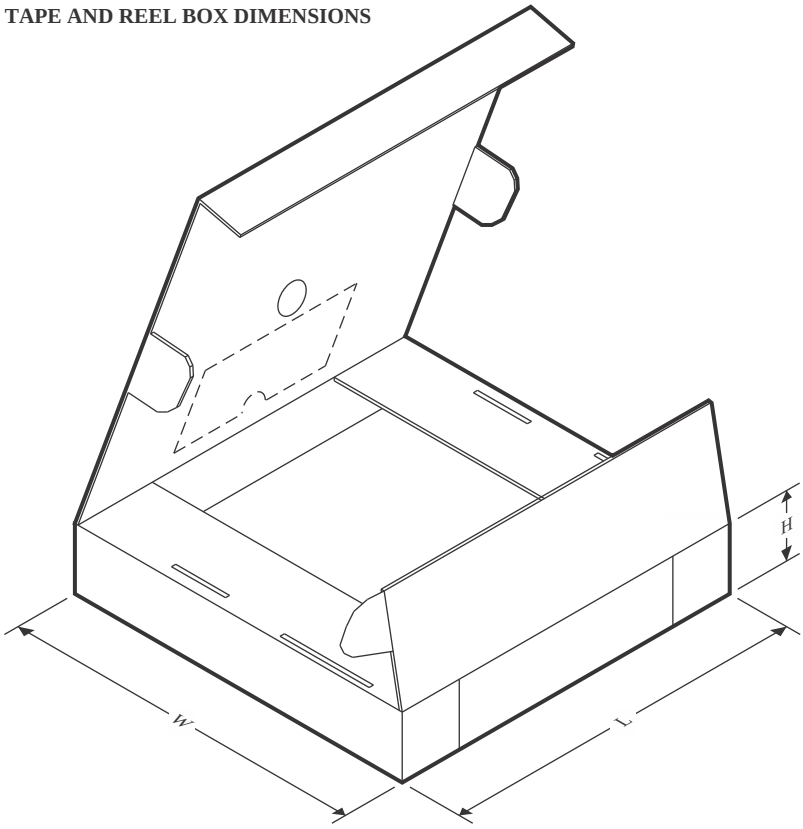

*All dimensions are nominal

Device	Package Type	Package Drawing	Pins	SPQ	Length (mm)	Width (mm)	Height (mm)
TPS613221ADBVR	SOT-23	DBV	5	3000	208.0	191.0	35.0
TPS613221ADBVT	SOT-23	DBV	5	250	210.0	185.0	35.0
TPS613222ADBVR	SOT-23	DBV	5	3000	210.0	185.0	35.0
TPS613222ADBVR	SOT-23	DBV	5	3000	210.0	185.0	35.0
TPS613222ADBVT	SOT-23	DBV	5	250	210.0	185.0	35.0
TPS613222ADBVT	SOT-23	DBV	5	250	210.0	185.0	35.0
TPS613222ADBVTG4	SOT-23	DBV	5	250	210.0	185.0	35.0
TPS613223ADBVR	SOT-23	DBV	5	3000	210.0	185.0	35.0
TPS613223ADBVR	SOT-23	DBV	5	3000	210.0	185.0	35.0
TPS613223ADBVT	SOT-23	DBV	5	250	210.0	185.0	35.0
TPS613223ADBVT	SOT-23	DBV	5	250	210.0	185.0	35.0
TPS613226ADBVR	SOT-23	DBV	5	3000	208.0	191.0	35.0
TPS613226ADBVT	SOT-23	DBV	5	250	210.0	185.0	35.0
TPS61322DBZR	SOT-23	DBZ	3	3000	210.0	185.0	35.0
TPS61322DBZR	SOT-23	DBZ	3	3000	180.0	180.0	18.0
TPS61322DBZR	SOT-23	DBZ	3	3000	210.0	185.0	35.0
TPS61322DBZT	SOT-23	DBZ	3	250	180.0	180.0	18.0
TPS61322DBZT	SOT-23	DBZ	3	250	210.0	185.0	35.0

Device	Package Type	Package Drawing	Pins	SPQ	Length (mm)	Width (mm)	Height (mm)
TPS61322DBZT	SOT-23	DBZ	3	250	210.0	185.0	35.0

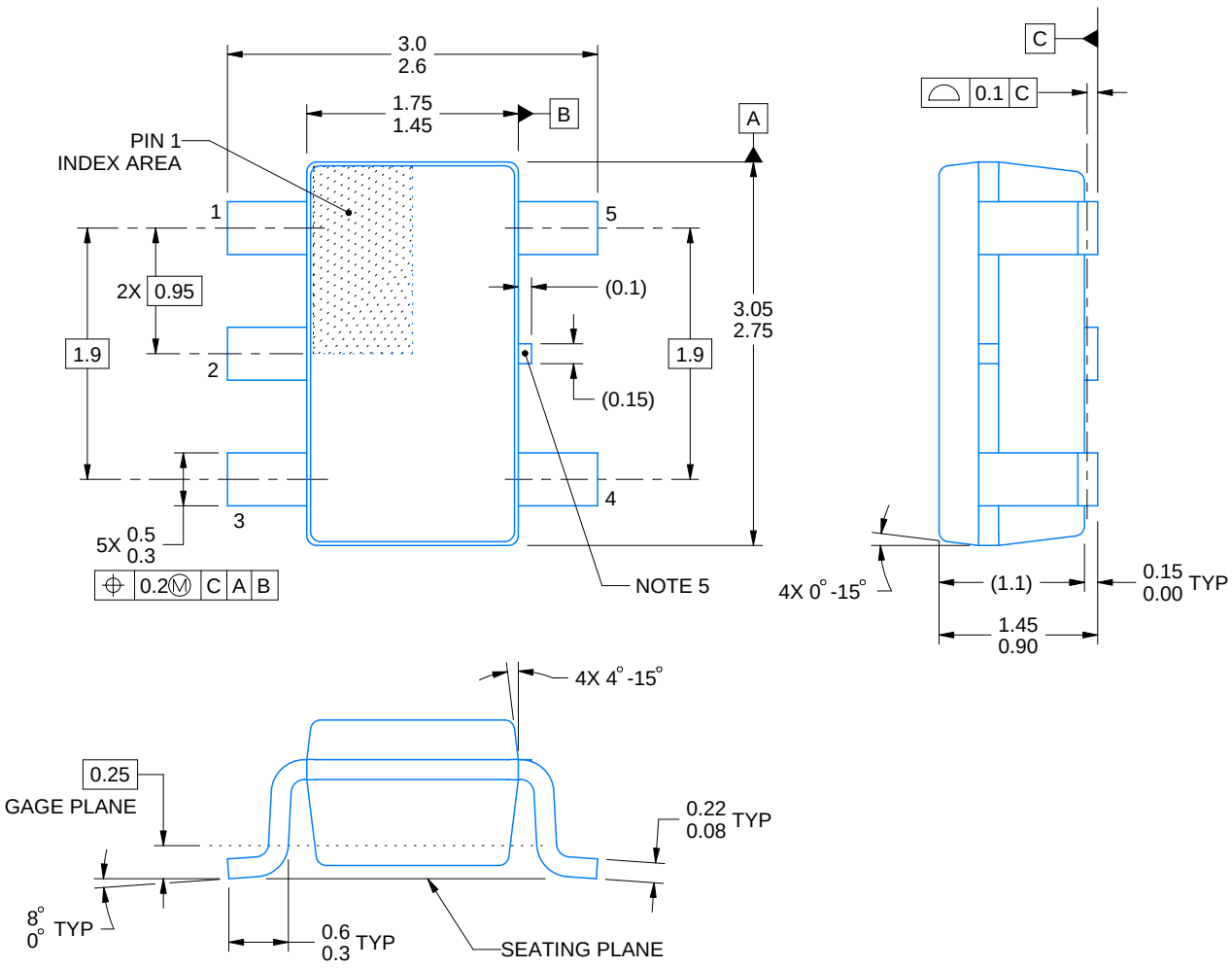

4214839/K 08/2024

NOTES:

1. All linear dimensions are in millimeters. Any dimensions in parenthesis are for reference only. Dimensioning and tolerancing per ASME Y14.5M.
2. This drawing is subject to change without notice.
3. Refernce JEDEC MO-178.
4. Body dimensions do not include mold flash, protrusions, or gate burrs. Mold flash, protrusions, or gate burrs shall not exceed 0.25 mm per side.
5. Support pin may differ or may not be present.

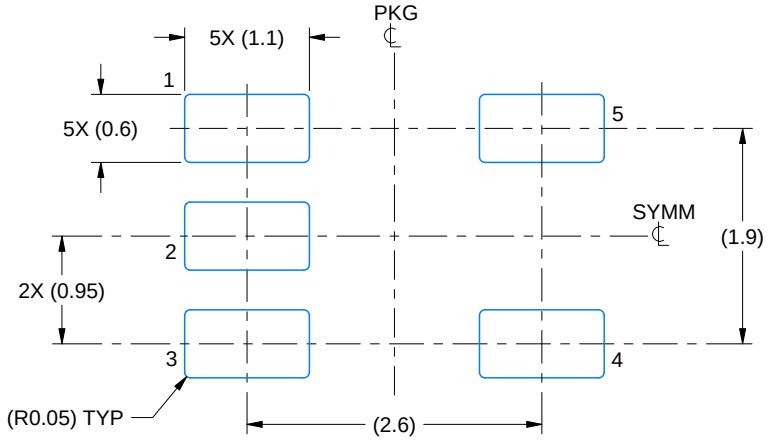

LAND PATTERN EXAMPLE
EXPOSED METAL SHOWN
SCALE:15X

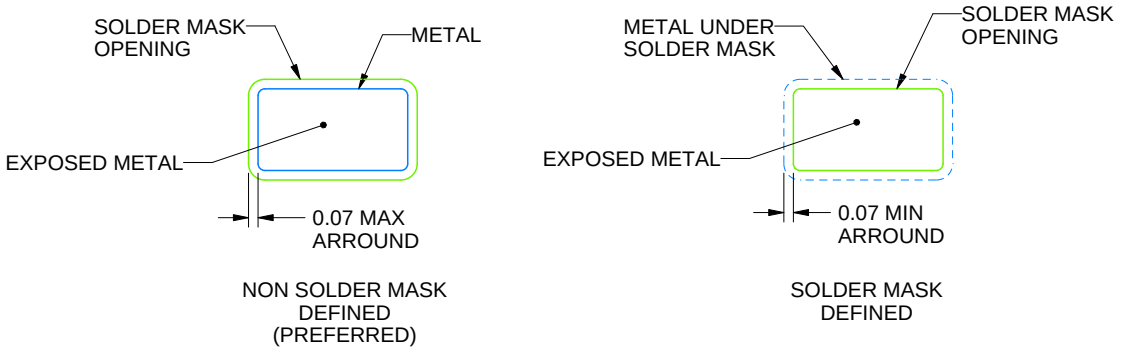

SOLDER MASK DETAILS

4214839/K 08/2024

NOTES: (continued)

6. Publication IPC-7351 may have alternate designs.
7. Solder mask tolerances between and around signal pads can vary based on board fabrication site.

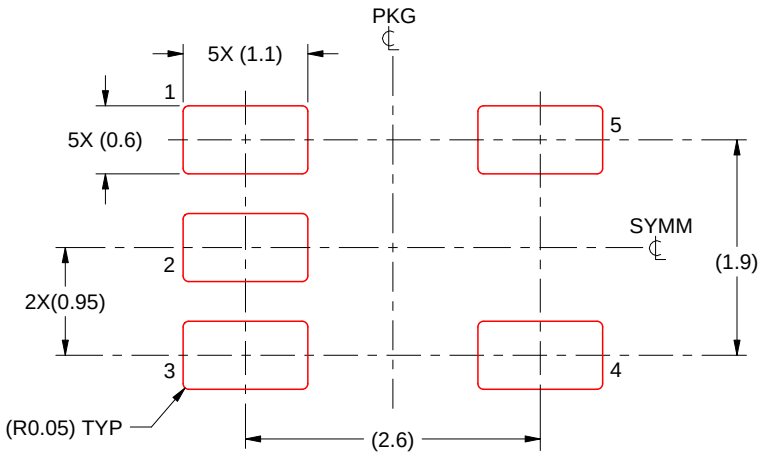

SOLDER PASTE EXAMPLE
BASED ON 0.125 mm THICK STENCIL
SCALE:15X

4214839/K 08/2024

NOTES: (continued)

8. Laser cutting apertures with trapezoidal walls and rounded corners may offer better paste release. IPC-7525 may have alternate design recommendations.
9. Board assembly site may have different recommendations for stencil design.

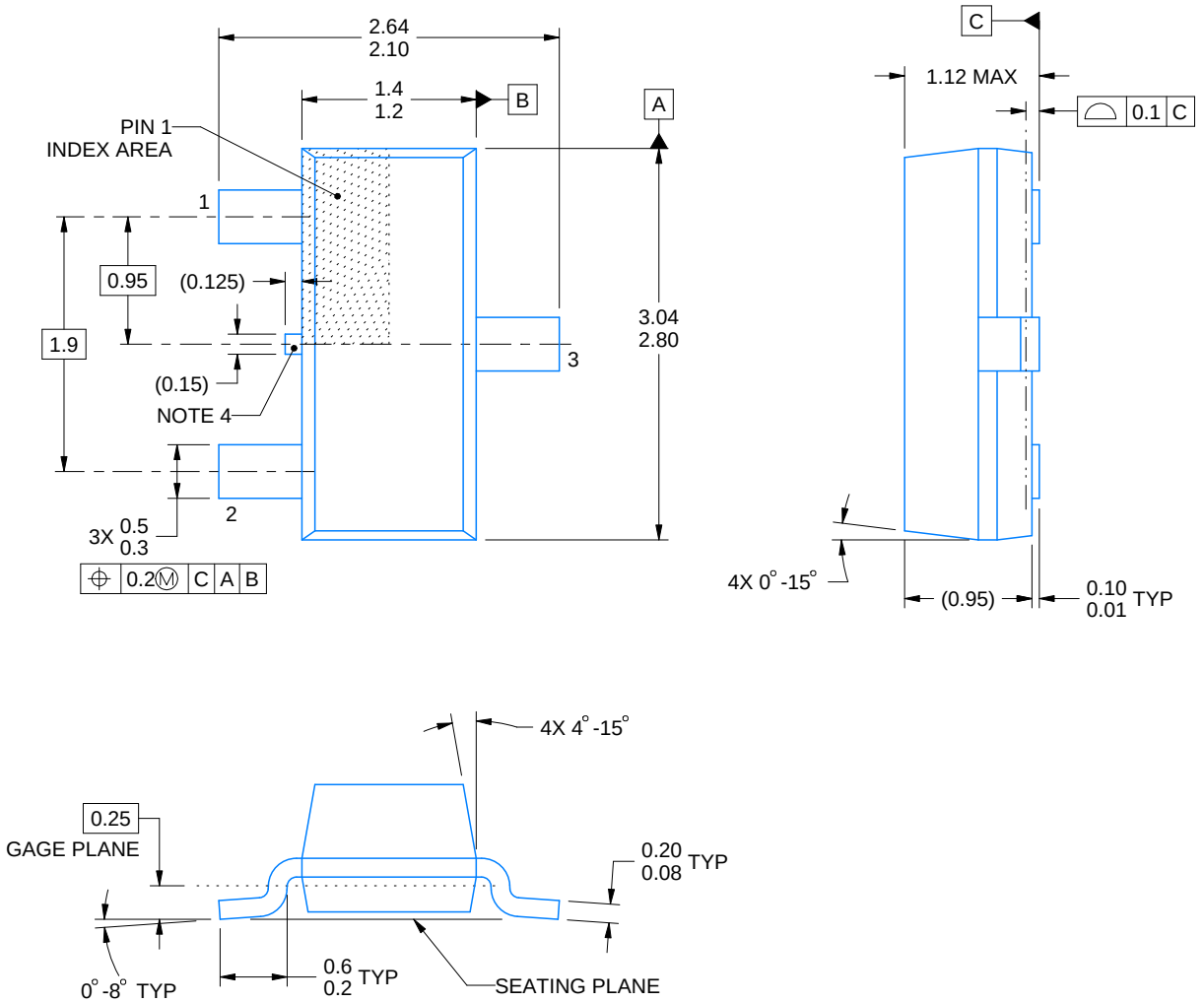

4214838/F 08/2024

NOTES:

1. All linear dimensions are in millimeters. Any dimensions in parenthesis are for reference only. Dimensioning and tolerancing per ASME Y14.5M.
2. This drawing is subject to change without notice.
3. Reference JEDEC registration TO-236, except minimum foot length.
4. Support pin may differ or may not be present.
5. Body dimensions do not include mold flash, protrusions, or gate burrs. Mold flash, protrusions, or gate burrs shall not exceed 0.25mm per side

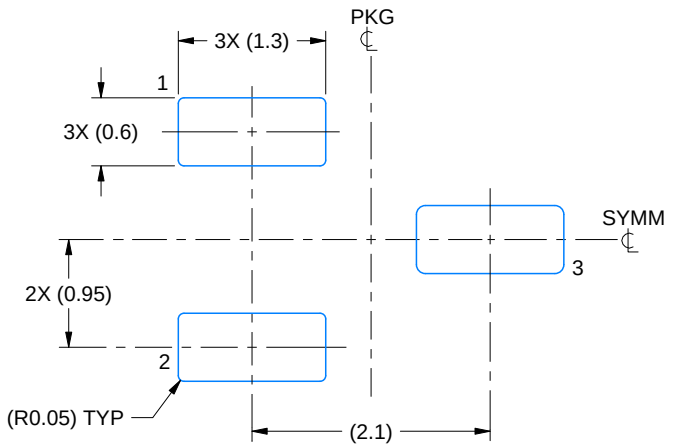

LAND PATTERN EXAMPLE
SCALE:15X

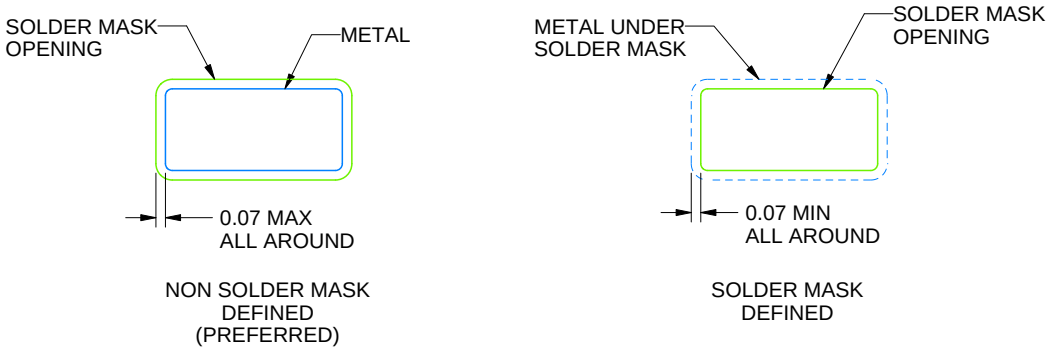

SOLDER MASK DETAILS

4214838/F 08/2024

NOTES: (continued)

5. Publication IPC-7351 may have alternate designs.
6. Solder mask tolerances between and around signal pads can vary based on board fabrication site.

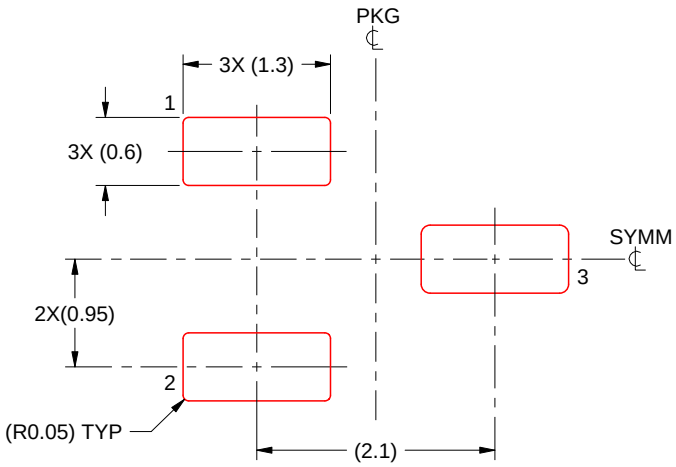

SOLDER PASTE EXAMPLE
BASED ON 0.125 THICK STENCIL
SCALE:15X

4214838/F 08/2024

NOTES: (continued)

7. Laser cutting apertures with trapezoidal walls and rounded corners may offer better paste release. IPC-7525 may have alternate design recommendations.
8. Board assembly site may have different recommendations for stencil design.

IMPORTANT NOTICE AND DISCLAIMER

TI PROVIDES TECHNICAL AND RELIABILITY DATA (INCLUDING DATASHEETS), DESIGN RESOURCES (INCLUDING REFERENCE DESIGNS), APPLICATION OR OTHER DESIGN ADVICE, WEB TOOLS, SAFETY INFORMATION, AND OTHER RESOURCES “AS IS” AND WITH ALL FAULTS, AND DISCLAIMS ALL WARRANTIES, EXPRESS AND IMPLIED, INCLUDING WITHOUT LIMITATION ANY IMPLIED WARRANTIES OF MERCHANTABILITY, FITNESS FOR A PARTICULAR PURPOSE OR NON-INFRINGEMENT OF THIRD PARTY INTELLECTUAL PROPERTY RIGHTS.

These resources are intended for skilled developers designing with TI products. You are solely responsible for (1) selecting the appropriate TI products for your application, (2) designing, validating and testing your application, and (3) ensuring your application meets applicable standards, and any other safety, security, regulatory or other requirements.

These resources are subject to change without notice. TI grants you permission to use these resources only for development of an application that uses the TI products described in the resource. Other reproduction and display of these resources is prohibited. No license is granted to any other TI intellectual property right or to any third party intellectual property right. TI disclaims responsibility for, and you fully indemnify TI and its representatives against any claims, damages, costs, losses, and liabilities arising out of your use of these resources.

TI’s products are provided subject to TI’s Terms of Sale, TI’s General Quality Guidelines, or other applicable terms available either on ti.com or provided in conjunction with such TI products. TI’s provision of these resources does not expand or otherwise alter TI’s applicable warranties or warranty disclaimers for TI products. Unless TI explicitly designates a product as custom or customer-specified, TI products are standard, catalog, general purpose devices.

TI objects to and rejects any additional or different terms you may propose.

Copyright © 2026, Texas Instruments Incorporated

Last updated 10/2025