TPS65224-Q1 Power Management IC (PMIC) with 4 BUCKs and 3 LDOs for Safety-Relevant Automotive Applications

1 Features

- Qualified for automotive applications
- AEC-Q100 qualified with the following results:
  - Input supply: 3 V to 5.5 V
  - Temperature grade 1: –40°C to +125°C (ambient)
  - HBM classification level 2
  - CDM classification level C4A
- Functional safety-compliant targeted
  - Developed for functional safety applications
  - Documentation to aid ISO26262 system design available upon product release
  - Systematic integrity up to ASIL-D targeted
  - Hardware integrity up to ASIL-B targeted
  - Undervoltage and overvoltage monitors and current limit on all output supply rails
  - Undervoltage and overvoltage monitors for two external supply rails and for input supply
  - Watchdog (trigger or Q&A)
  - Error signal monitor (level or PWM)
  - Temperature warning and thermal shutdown
  - Built-in self-test on voltage monitors
- BUCK1 + BUCK2 high-efficiency step-down DC/DC converters
  - Output voltage: 0.5 V to 3.3 V (0.5 V to 1.2 V for dual-phase output)
  - Output current: 5 A in single-phase, 10 A in dual-phase
  - Switching frequency: 2.2 MHz or 4.4 MHz
- BUCK3 + BUCK4 high-efficiency step-down DC/DC converters
  - Output voltage: 0.5 V to 3.3 V
  - Output current: 2 A
  - Switching frequency: 2.2 MHz or 4.4 MHz
- Two low-dropout (LDO) linear regulators with configurable load-switch mode
  - Output voltage: 0.6 V to 3.3 V in regulation mode, 1.7 V to 3.3 V in load-switch mode
  - Output current: 400 mA
- One low-dropout (LDO) linear regulator with low-noise performance and with configurable load-switch mode
  - Output voltage: 1.2 V to 3.3 V in regulation mode, 2.2 V to 3.6 V in load-switch mode
  - Output current: 300 mA
- Six configurable general-purpose input-output (GPIO) pins, reset and safe state outputs
- One 12-bit ADC
- OTP configurable power sequence
- 36-pin, 5 mm × 6 mm, QFN package, 0.5-mm pitch

2 Applications

- Automotive application processors such as AM62A3-Q1, AM62A7-Q1 and AM62P-Q1
- Automotive infotainment and digital cluster, eMirror, Camera Mirror System (CMS)
- navigation systems, telematics
- Driver Monitoring System (DMS), Occupancy Monitoring System (OMS), ADAS Front Camera

3 Description

The TPS65224-Q1 device meets the power management requirements of the latest processors and platforms in various safety-relevant applications. The device is characterized across an ambient temperature range of -40°C to +125°C, making the PMIC an excellent choice for various automotive applications. The device has four step-down DC/DC (BUCK) converters, of which two can be used in a dual-phase configuration. Furthermore, the device has three low drop-out (LDO) regulators, which can also be used as load-switches.

Packaging Information

PART NUMBER	PACKAGE(1)	PACKAGE SIZE(2)
TPS65224-Q1	VQFN-HR (36)	5.00 mm × 6.00 mm

(1) For all available packages, see the orderable addendum at the end of the data sheet.
(2) The package size (length × width) is a nominal value and includes pins, where applicable

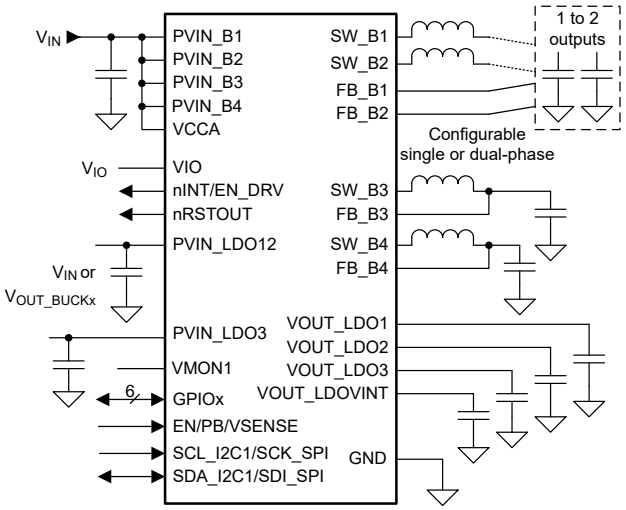

Simplified Application

ADVANCE INFORMATION

ADVANCE INFORMATION

4 Device and Documentation Support

TI offers an extensive line of development tools. Tools and software to evaluate the performance of the device, generate code, and develop solutions are listed in www.ti.com/product/TPS65224-Q1.

4.1 Device Support

4.1.1 Device Nomenclature

The following acronyms and terms are used in this data sheet. For a detailed list of terms, acronyms, and definitions, see the *TI glossary*.

ABIST	Analog Built-In Self-Test
ADC	Analog-to-Digital Converter
AVS	Adaptive Voltage Scaling
BIST	Built-In Self-Test
CRC	Cyclic Redundancy Check
DAC	Digital-to-Analog Converter
DCR	DC Resistance of an inductor
DVS	Dynamic Voltage Scaling
EMC	Electromagnetic Compatibility
ESM	Error Signal Monitor
ESR	Equivalent Series Resistance
FSD	First Supply Detection
GPIO	General-Purpose Input and Output
I^2C	Inter-Integrated Circuit
LDO	Low-Dropout voltage linear regulator
NA	Not Applicable
MCU	Micro Controller Unit
NVM	Non-Volatile Memory
OPN	Orderable Part Number
OTP	One Time Programmable
OV	Overvoltage
OVP	Overvoltage Protection
PD	Pull-Down
PDN	Power Delivery Network
PFM	Pulse Frequency Modulation
PFSM	Pre-configured Finite State Machine
PGOOD	Power Good (signal which indicates that the monitored power supply rail is in range)
PLL	Phase Locked Loop
PMIC	Power-Management Integrated Circuit
POR	Power On Reset
PU	Pull-Up
PP	Push-Pull

PSRR	Power Supply Rejection Ratio
PWM	Pulse Width Modulation
SoC	System on Chip
SPI	Serial Peripheral Interface
TSD	Thermal Shut-Down
UV	Undervoltage
UVLO	Undervoltage Lockout
VMON	Voltage Monitor

4.2 Receiving Notification of Documentation Updates

To receive notification of documentation updates, navigate to the device product folder on ti.com. Click on *Notifications* to register and receive a weekly digest of any product information that has changed. For change details, review the revision history included in any revised document.

4.3 Support Resources

TI E2E™ support forums are an engineer's go-to source for fast, verified answers and design help — straight from the experts. Search existing answers or ask your own question to get the quick design help you need.

Linked content is provided "AS IS" by the respective contributors. They do not constitute TI specifications and do not necessarily reflect TI's views; see TI's Terms of Use.

4.4 Third-Party Products Disclaimer

TI'S PUBLICATION OF INFORMATION REGARDING THIRD-PARTY PRODUCTS OR SERVICES DOES NOT CONSTITUTE AN ENDORSEMENT REGARDING THE SUITABILITY OF SUCH PRODUCTS OR SERVICES OR A WARRANTY, REPRESENTATION OR ENDORSEMENT OF SUCH PRODUCTS OR SERVICES, EITHER ALONE OR IN COMBINATION WITH ANY TI PRODUCT OR SERVICE.

4.5 Trademarks

TI E2E™ is a trademark of Texas Instruments.
All trademarks are the property of their respective owners.

4.6 Electrostatic Discharge Caution

This integrated circuit can be damaged by ESD. Texas Instruments recommends that all integrated circuits be handled with appropriate precautions. Failure to observe proper handling and installation procedures can cause damage.

ESD damage can range from subtle performance degradation to complete device failure. Precision integrated circuits may be more susceptible to damage because very small parametric changes could cause the device not to meet its published specifications.

4.7 Glossary

TI Glossary	This glossary lists and explains terms, acronyms, and definitions.

5 Revision History

NOTE: Page numbers for previous revisions may differ from page numbers in the current version.

DATE	REVISION	NOTES
December 2023	*	Advance Information

ADVANCE INFORMATION

6 Mechanical, Packaging, and Orderable Information

The following pages include mechanical, packaging, and orderable information. This information is the most current data available for the designated devices. This data is subject to change without notice and revision of this document. For browser-based versions of this data sheet, refer to the left-hand navigation.

6.1 Package Option Addendum

6.1.1 Packaging Information

Orderable Device	Status (1)	Package Type	Package Drawing	Pins	Package Qty	Eco Plan (2)	Lead/Ball Finish	MSL Peak Temp (3)	Op Temp (°C)	Device Marking(4) (5)
TPS65224RAHRQ1	PREVIEW	VQFN-HR	RAH	36	3000	Green (RoHS & no Sb/Br)	SN	Level-2-260C-1 YEAR	-40 to 125	TPS65224-Q1

(1) The marketing status values are defined as follows:
ACTIVE: Product device recommended for new designs.
LIFEBUY: TI has announced that the device will be discontinued, and a lifetime-buy period is in effect.
NRND: Not recommended for new designs. Device is in production to support existing customers, but TI does not recommend using this part in a new design.
PRE_PROD Unannounced device, not in production, not available for mass market, nor on the web, samples not available.
PREVIEW: Device has been announced but is not in production. Samples may or may not be available.
OBSOLETE: TI has discontinued the production of the device.

(2) Eco Plan - The planned eco-friendly classification: Pb-Free (RoHS), Pb-Free (RoHS Exempt), or Green (RoHS & no Sb/Br) - please check http://www.ti.com/productcontent for the latest availability information and additional product content details.
TBD: The Pb-Free/Green conversion plan has not been defined.
Pb-Free (RoHS): TI's terms "Lead-Free" or "Pb-Free" mean semiconductor products that are compatible with the current RoHS requirements for all 6 substances, including the requirement that lead not exceed 0.1% by weight in homogeneous materials. Where designed to be soldered at high temperatures, TI Pb-Free products are suitable for use in specified lead-free processes.
Pb-Free (RoHS Exempt): This component has a RoHS exemption for either 1) lead-based flip-chip solder bumps used between the die and package, or 2) lead-based die adhesive used between the die and leadframe. The component is otherwise considered Pb-Free (RoHS compatible) as defined above.
Green (RoHS & no Sb/Br): TI defines "Green" to mean Pb-Free (RoHS compatible), and free of Bromine (Br) and Antimony (Sb) based flame retardants (Br or Sb do not exceed 0.1% by weight in homogeneous material)

(3) MSL, Peak Temp. -- The Moisture Sensitivity Level rating according to the JEDEC industry standard classifications, and peak solder temperature.

(4) There may be additional marking, which relates to the logo, the lot trace code information, or the environmental category on the device

(5) Multiple Device markings will be inside parentheses. Only on Device Marking contained in parentheses and separated by a "~" will appear on a device. If a line is indented then it is a continuation of the previous line and the two combined represent the entire Device Marking for that device.

6.1.2 Tape and Reel Information

REEL DIMENSIONS

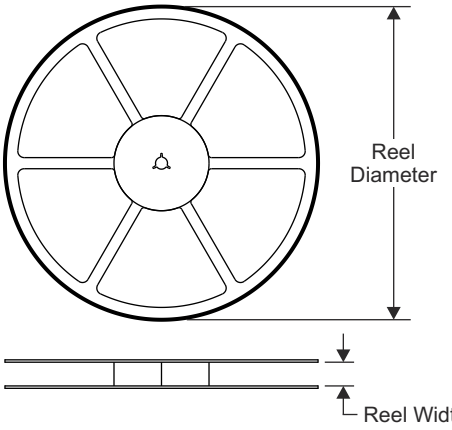

TAPE DIMENSIONS

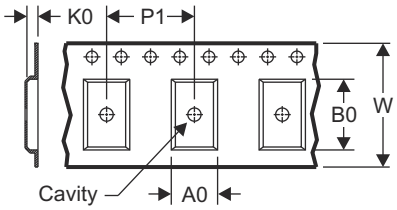

A0	Dimension designed to accommodate the component width
B0	Dimension designed to accommodate the component length
K0	Dimension designed to accommodate the component thickness
W	Overall width of the carrier tape
P1	Pitch between successive cavity centers

QUADRANT ASSIGNMENTS FOR PIN 1 ORIENTATION IN TAPE

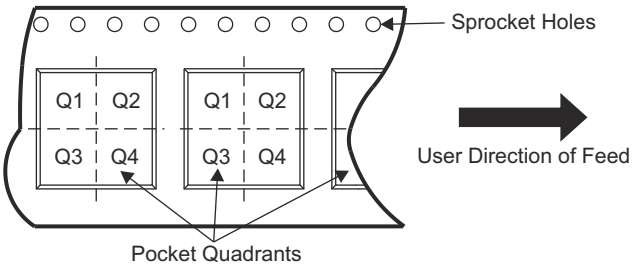

Device	Package Type	Package Drawing	Pins	SPQ	Reel Diameter (mm)	Reel Width W1 (mm)	A0 (mm)	B0 (mm)	K0 (mm)	P1 (mm)	W (mm)	Pin1 Quadrant
TPS65224RAHRQ1	VQFN-HR	RAH	36	3000	330.0	12.4	5.3	6.3	1.15	8.0	12	Q2

ADVANCE INFORMATION

TAPE AND REEL BOX DIMENSIONS

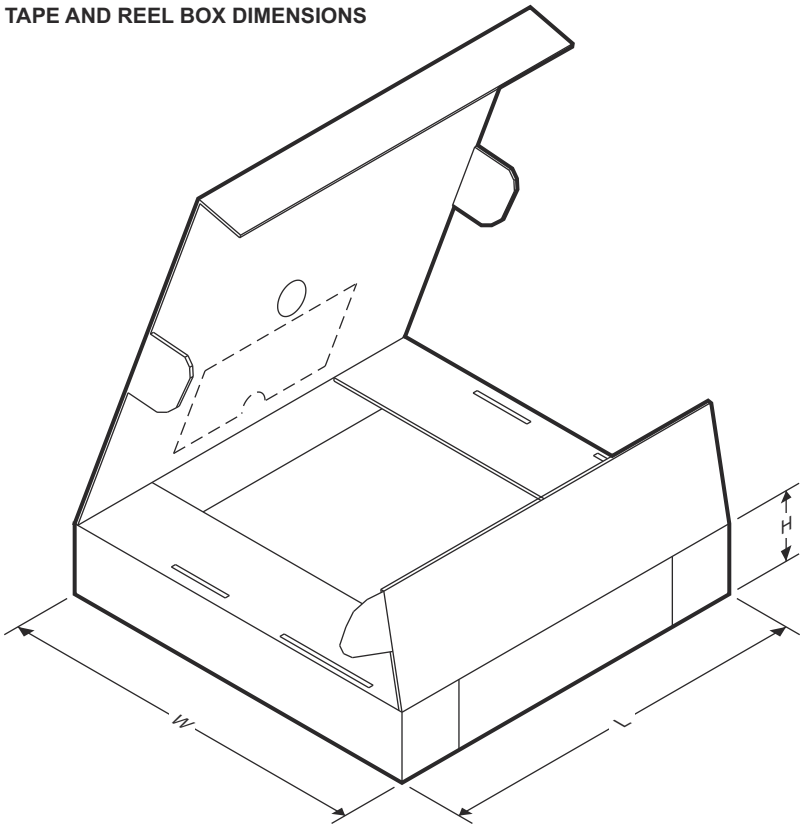

Device	Package Type	Package Drawing	Pins	SPQ	Length (mm)	Width (mm)	Height (mm)
TPS65224RAHRQ1	VQFN-HR	RAH	36	3000	367.0	367.0	35.0

ADVANCE INFORMATION

ADVANCE INFORMATION

6.2 Mechanical Data

RAH0036A

PACKAGE OUTLINE

VQFN-HR - 1 mm max height

PLASTIC QUAD FLATPACK - NO LEAD

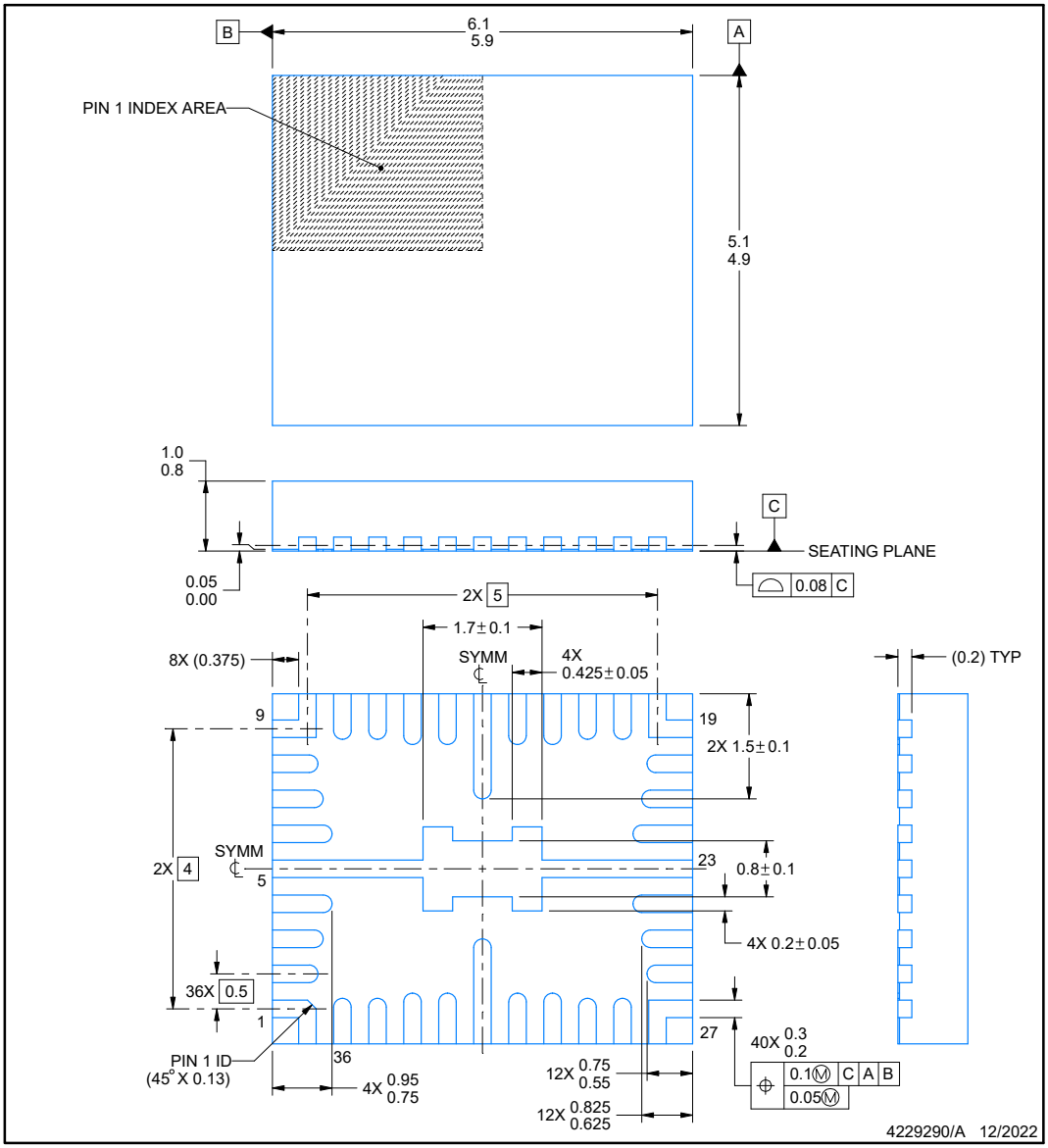

NOTES:

1. All linear dimensions are in millimeters. Any dimensions in parenthesis are for reference only. Dimensioning and tolerancing per ASME Y14.5M.
2. This drawing is subject to change without notice.
3. The package thermal pad must be soldered to the printed circuit board for thermal and mechanical performance.

EXAMPLE BOARD LAYOUT

RAH0036A **VQFN-HR - 1 mm max height**

PLASTIC QUAD FLATPACK - NO LEAD

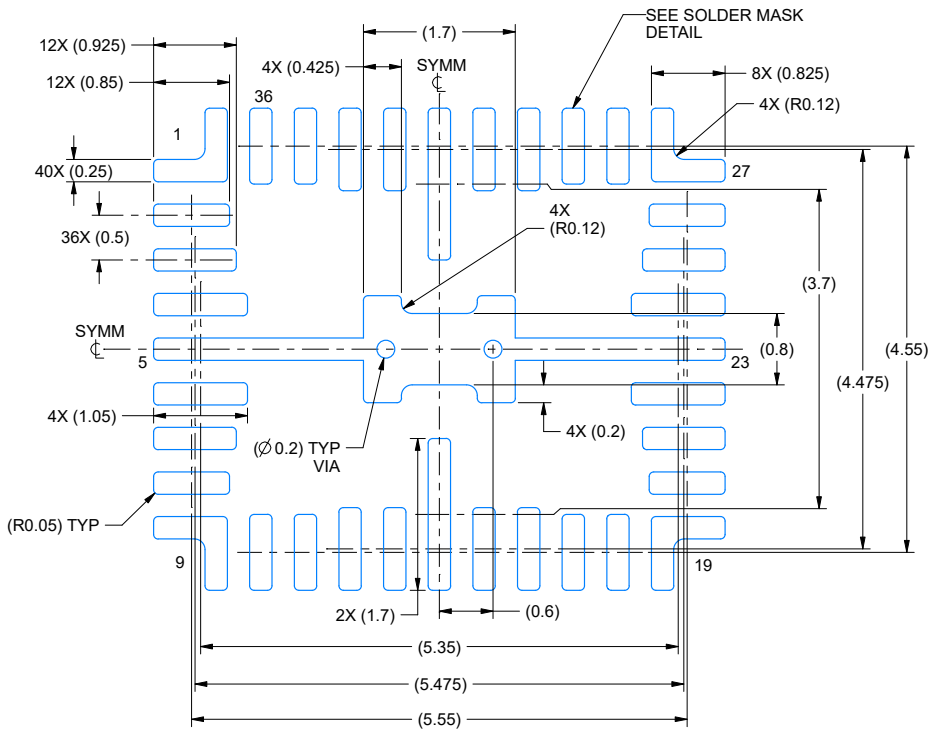

LAND PATTERN EXAMPLE
EXPOSED METAL SHOWN
SCALE: 15X

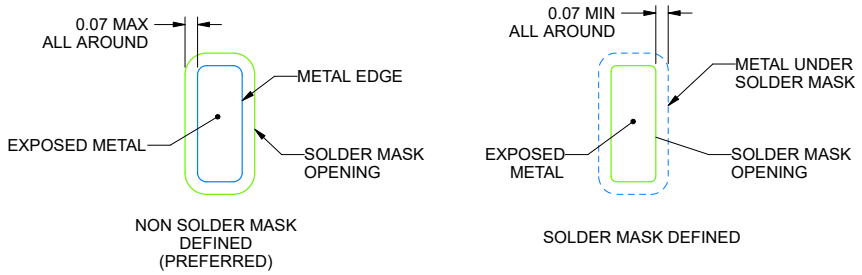

SOLDER MASK DETAILS

4229290/A 12/2022

NOTES: (continued)

4. This package is designed to be soldered to a thermal pad on the board. For more information, see Texas Instruments literature number SLUA271 (www.ti.com/lit/slua271).
5. Vias are optional depending on application, refer to device data sheet. If any vias are implemented, refer to their locations shown on this view. It is recommended that vias under paste be filled, plugged or tented.

ADVANCE INFORMATION

ADVANCE INFORMATION

EXAMPLE STENCIL DESIGN

RAH0036A **VQFN-HR - 1 mm max height**

PLASTIC QUAD FLATPACK - NO LEAD

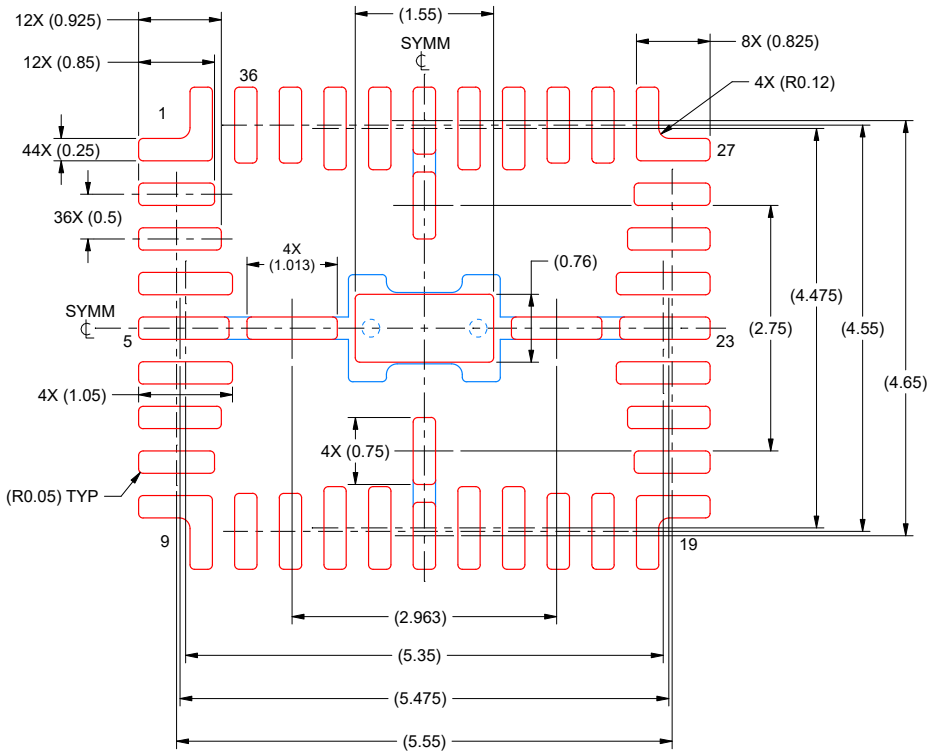

SOLDER PASTE EXAMPLE
BASED ON 0.125 MM THICK STENCIL
SCALE: 15X

PRINTED SOLDER COVERAGE BY AREA UNDER PACKAGE
PAD CONNECTED TO PINS 5 & 23: 76%
PADS 14 & 32: 88%

4229290/A 12/2022

NOTES: (continued)

6. Laser cutting apertures with trapezoidal walls and rounded corners may offer better paste release. IPC-7525 may have alternate design recommendations.