EVM User's Guide: BQ25186EVM

BQ25186 Evaluation Module

Description

The BQ25186EVM is an evaluation kit for the BQ25186 battery charge management IC. The BQ25186 is an I^{2}C controlled, 1A linear battery charger with Power Path in a small QFN package with a thermal pad. The BQ25186 integrates the most common functions for industrial and personal electronics applications and provides ultra-low IQ, integrated protections, programmability, TS monitoring, and best thermal performance in a small solution-size.

Features

- 1A linear battery charger
- I^{2}C configurable battery regulation voltage with 0.5% accuracy
- Configurable termination current down to 0.5mA
- Programmable thermal charging profile with configurable hot, warm, cool, and cold thresholds
- Power path management for powering the system and charging the battery
- 15nA shutdown mode for longest shelf life
- One button wake-up and reset input with adjustable timers
- I^{2}C communication control
- Dedicated VIN Power Good (PG) and Charge Enable (CE) pins

Applications

- TWS headset and charging case
- Smart glasses: AR and VR
- Smartwatches and other wearable devices
- Retail automation and payment
- Building automation

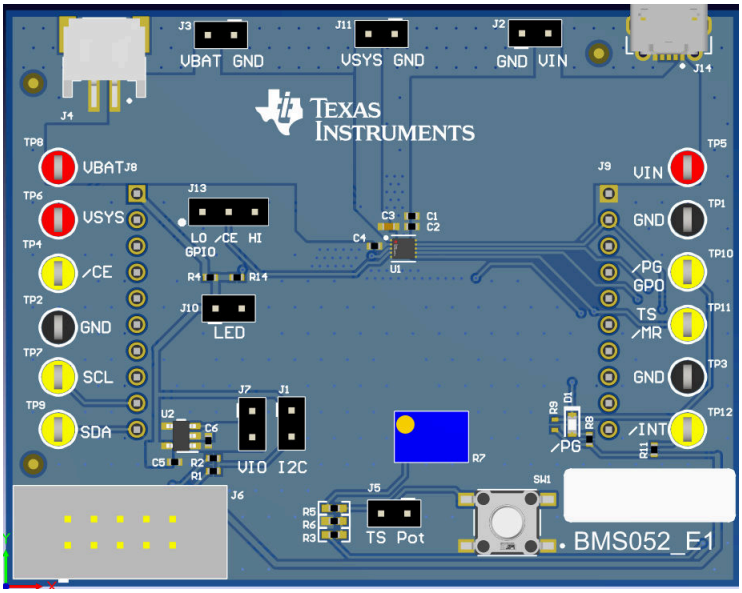

BQ25186EVM Hardware Board

1 Evaluation Module Overview

1.1 Introduction

This user's guide provides detailed testing instructions for the BQ25186 evaluation module (EVM). Also included are descriptions of the necessary equipment, equipment setup, procedures, the printed-circuit board layouts, schematics, and the bill of materials (BOM).

Throughout this user's guide, the abbreviation *EVM, BQ25186EVM,* and the term evaluation module are synonymous with the BQ25186 evaluation module, unless otherwise noted.

	**Caution**	**Hot surface.** **Contact can cause burns.** **Do not touch.** Some components can reach high temperatures >55°C when the board is powered on. The user must not touch the board at any point during operation or immediately after operating, as high temperatures can be present.

1.2 Kit Contents

Item	Quantity
BQ25186EVM	1

1.3 Specification

Parameter	Description	Min	Typ	Max	Unit
V_{IN}	Input voltages		5	25	V
V_{BAT}	Battery voltages		3.0 - 4.2	5.5	V
V_{SYS}	System rail voltages			5.5	V
$I_{SYS\ (DC)}$	System load current			1	A
$I_{SYS\ (Peak)}$	System peak current			2.5	A

1.4 Device Information

The detailed features and operations are described in the BQ25186 data sheet (SLUSF69). The BMS052 evaluation module (BQ25186EVM) is a complete charger module for evaluating an I2C, 1A linear charger.

2 Hardware

2.1 EVM Setup

Table 2-1 lists the jumper connections and the jumper description.

Table 2-1. Jumper Descriptions

Jumper Name	Description
J1	Provide the I^{2}C pull-up to 3p3 V. Note: The USB2ANY provides this pull-up when using the TI Charger GUI.
J2	VIN and GND connector. Input voltage from external power supply. Recommended voltage is 5V and OVP is 5.7V. Max input voltage is 25V while in OVP.
J3	VBAT and GND connector. Battery connection using jumper for easy access.
J4	Battery pack connector. Battery connection using JST header.
J5	TS potentiometer connector. Connects TS potentiometer to TS pin. Leaving this jumper leaves the TS pin open.
J6	USB2ANY connector. For connecting the device to the USB2ANY evaluation board to allow computer to interface with the EVM.
J7	VIO connector to 3p3 V. This is supplied by an external on-board LDO. Pulls the /PG and /INT high when populated.
J8, J9	Board connector to the other module.
J10	Power Good (PG) LED jumper
J11	VSYS and GND connector.
J13	/CE connector. Connects /CE pin to high or low setting.
J14	Micro USB connector (optional for VIN)

Figure 2-1 shows the various connections and features on the device.

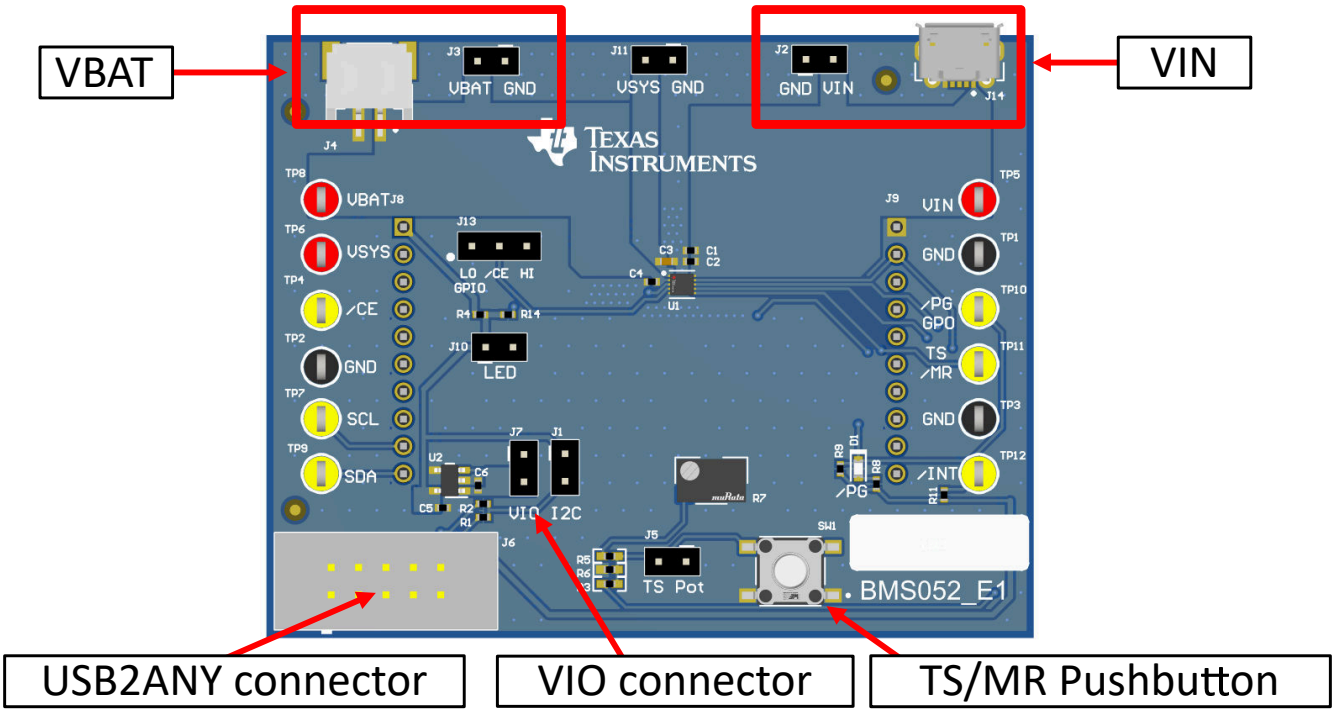

Figure 2-1. EVM Connections

Table 2-2 lists the recommended operating conditions.

Table 2-2. Recommended Operating Conditions

		MIN	NOM	MAX	UNIT
VBAT	Battery voltage range	2.2		4.6	V
VIN	Input voltage range	2.7		5.5	V
IIN	Input current range (IN to SYS)			1.1	A
IBAT	Battery discharge current (BAT to SYS)			1.5	A
T_A	Operating ambient temperature range	-40		85	°C
T_J	Operating junction temperature range	-40		125	°C

2.2 EVM Connectors and Test Points

Table 2-3 shows the default configuration for connectors.

Table 2-3. Jumper Default Configuration

Jumper Name	Description	Setting
J1	I^2C Pullup	NA
J2	VIN and GND connector	NA
J3	VBAT and GND connector	NA
J4	Battery pack connector	NA
J5	TS potentiometer connector	Connected
J6	USB2ANY connector	NA
J7	VIO connector to 3p3V	Connected
J8, J9	Board connector to other modules	NA
J10	LED jumper	Connected
J11	VSYS and GND connector	NA
J13	Charge enable jumper control	Low
J14	Micro USB connector (optional for VIN)	NA

Table 2-4 describes the test points available on the board for easy access measurement.

Table 2-4. Test Point Descriptions

Test Point	Description
TP1, TP2, TP3	IC GND test point
TP4	IC /CE test point
TP5	IC VIN test point
TP6	IC VSYS test point
TP7	IC SCL test point
TP8	IC VBAT test point
TP9	IC SDA test point
TP10	IC /PG or GPO test point
TP11	IC TS/MR test point
TP12	IC /INT test point

3 Implementation Results

3.1 Testing Procedures

3.1.1 Equipment

This section includes a list of supplies recommended to perform tests on this EVM.

1. *Two Power Supplies:* Keithley 2400 Power Supply or equivalent.
   a. Power Supply #1 (PS #1) is used as input voltage.
   b. Power Supply #2 (PS #2) is used as battery voltage.
2. *Four Channel Oscilloscope:* To monitor voltages at VIN, VBAT, and VSYS.
   a. Channel 1 (SC #1) is used to probe VIN.
   b. Channel 2 (SC #2) is used to probe VBAT
   c. Channel 3 (SC #3) is used to probe VSYS.
3. *Computer:* A computer with a least one USB port and a USB cable.
4. *PC communication interface:* USB2ANY with the latest firmware
5. *Software:* Download the TI Charger GUI from Texas Instruments.

3.1.2 Charge Mode

Connect the equipment as follows:

- Power Supply PS #1: VIN of the BQ25186EVM at 5V
- Power Supply PS #2: VBAT of the BQ25186EVM at 3.7V
- Scope Channel SC#1: VIN at TP5
- Scope Channel SC#2: VBAT at TP8
- Scope Channel SC#3: VSYS at TP6

Turn ON power supply PS #2, then turn ON supply PS #1. With PS #1 enabled, VSYS rises to the level of 4.5V and the /PG LED turns on to indicate Power Good. The device begins to charge as long as TS is left at default configuration, J13 connects the /CE pin to low, and there are no other faults.

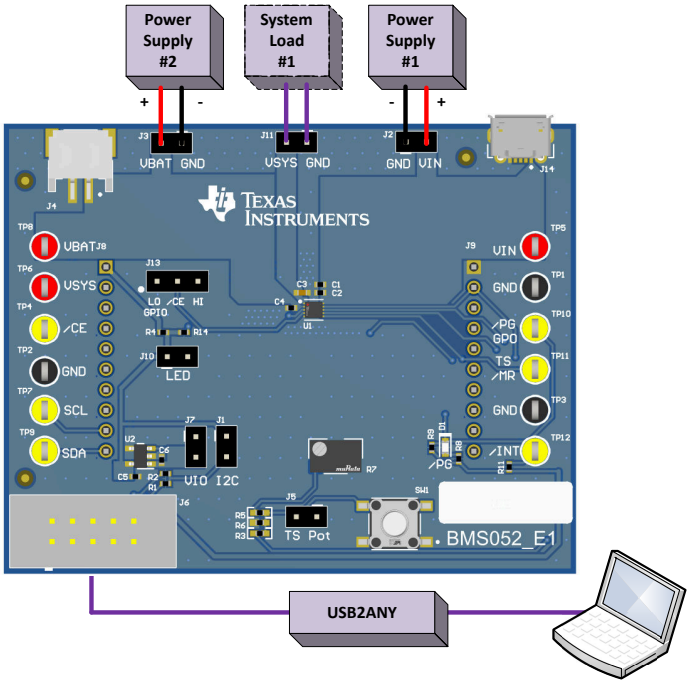

Figure 3-1. BQ25186EVM Connections

To adjust the charge current or change other parameters, connect the USB2ANY to the EVM and then startup the TI Charger GUI.

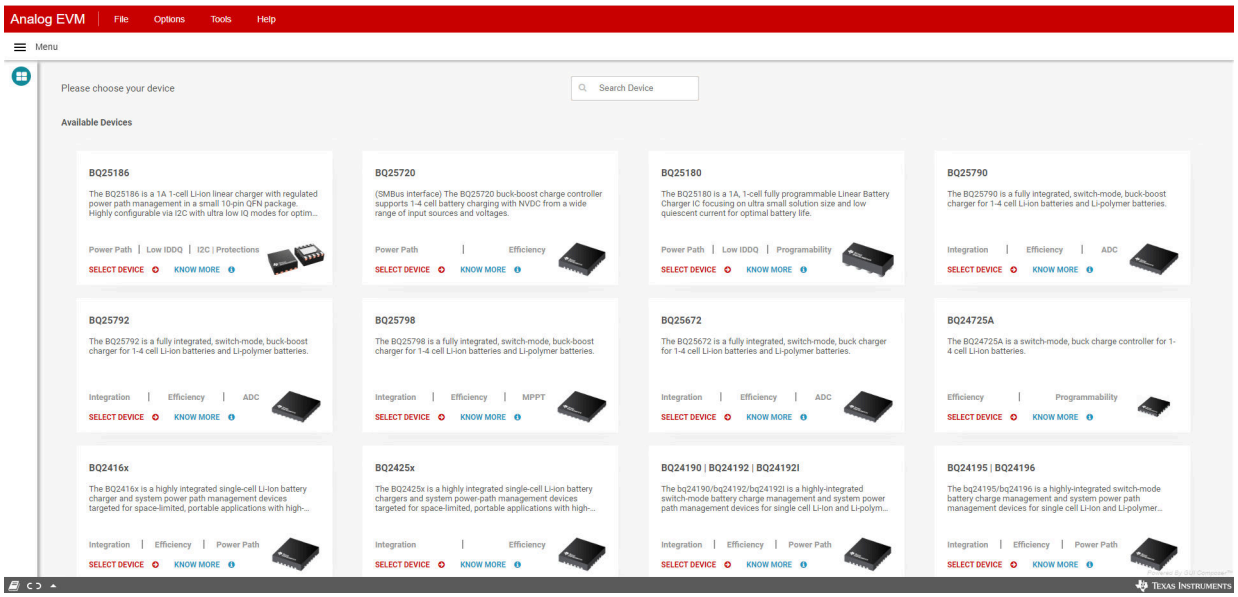

Figure 3-2. TI Charger GUI Device Selection

Select BQ25186 from the charger selection. Click *Quick Start* or *Register Map*.

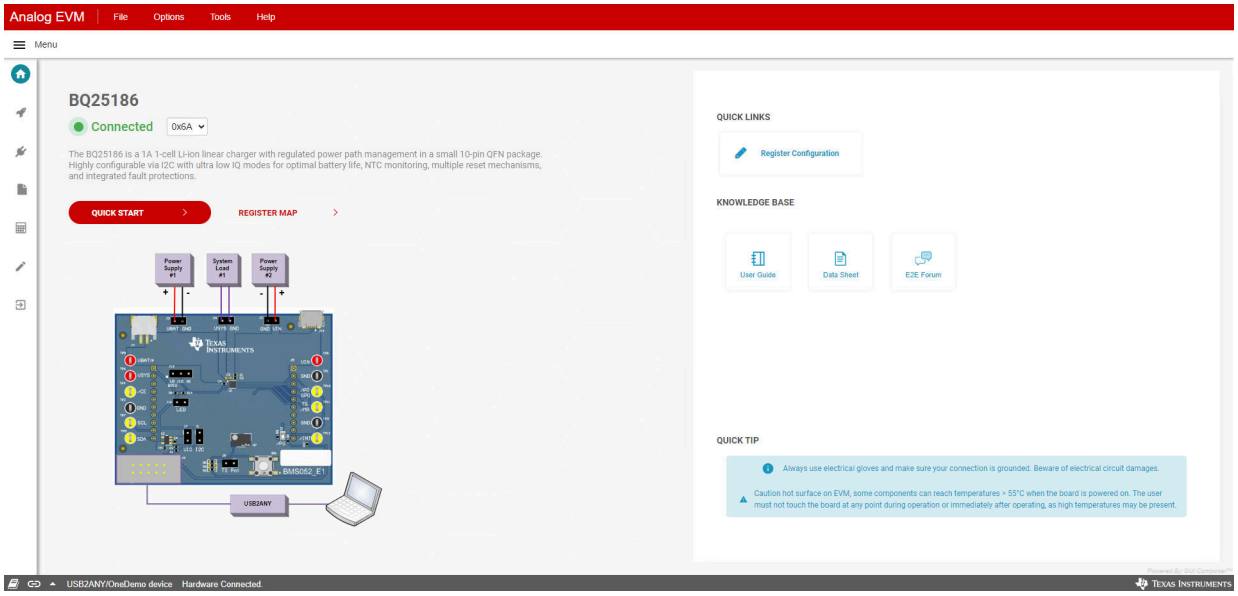

Figure 3-3. BQ25186EVM Connected

The quick start is shown in Figure 3-4. Disabling the charge through I^{2}C overrides the charge disable pin.

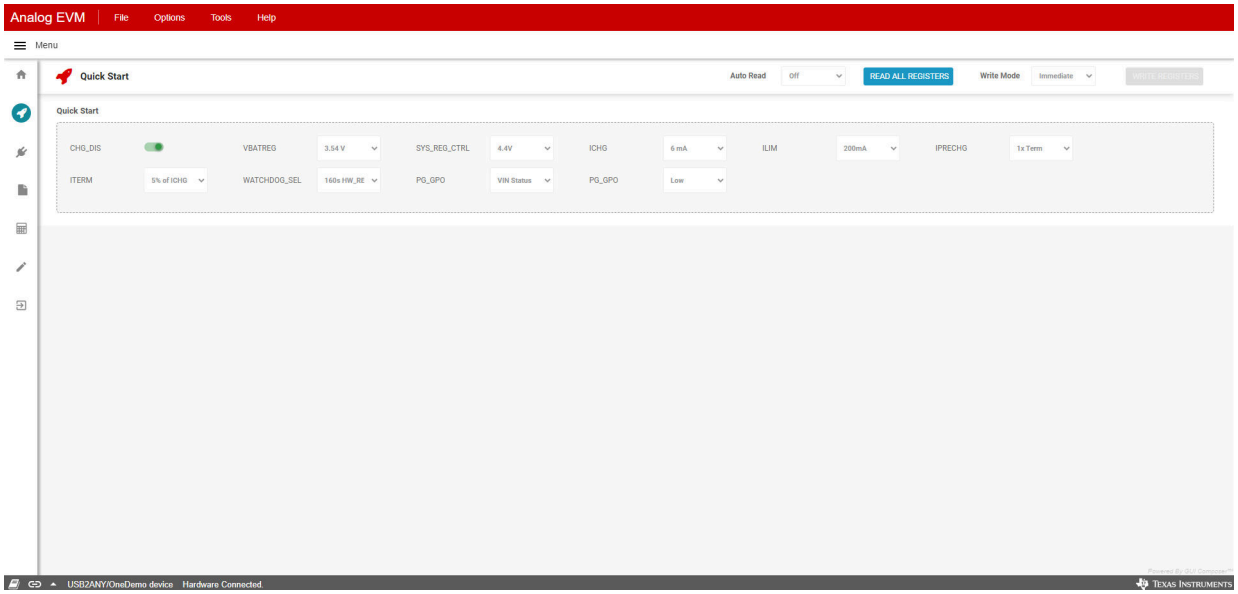

Figure 3-4. BQ25186EVM GUI Quick Start

The register map is shown in Figure 3-5.

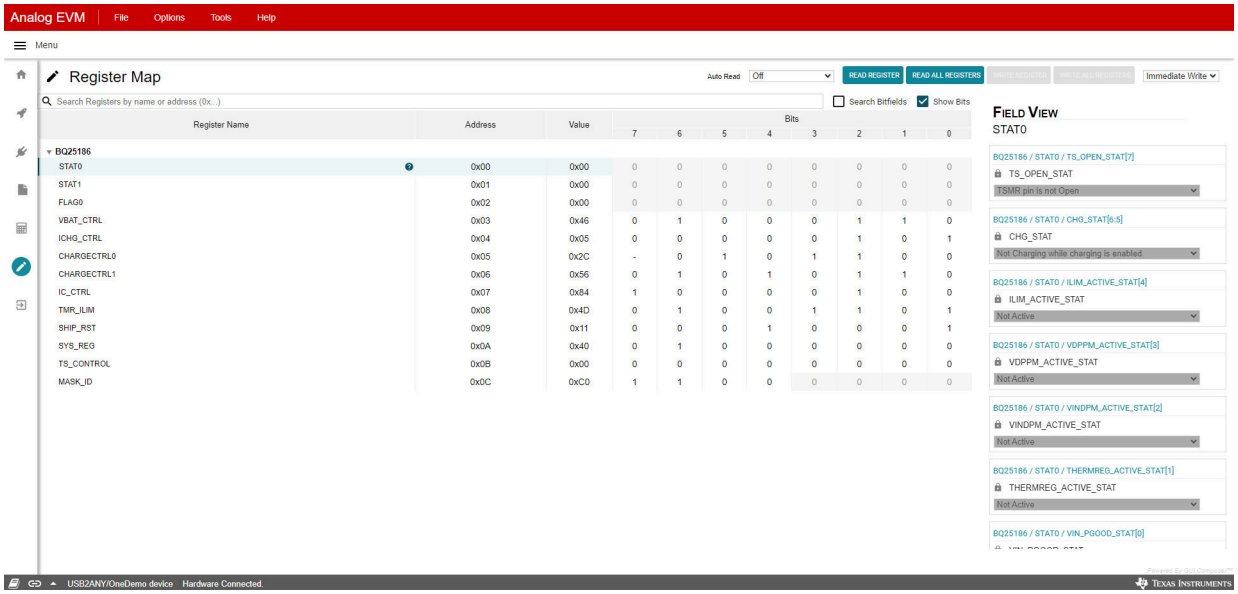

Figure 3-5. BQ25186 Register Map

3.1.3 Ship Mode

To enter the Ship Mode state, connect the equipment as follows:

- Power Supply PS #1: VIN of the BQ25186EVM at 0V, OFF, or disconnected
- Power Supply PS #2: VBAT of the BQ25186EVM at 3.7V
- Scope Channel SC #1: VIN at TP5
- Scope Channel SC #2: VBAT at TP8
- Scope Channel SC #3: VSYS at TP6
- Scope Channel SC #4: TS/MR at TP11

Turn ON power supply #2. Enter Ship Mode by setting the EN_RST_SHIP bits in the SHIP_RST register (0x09) to 2b10. Users are in Ship Mode when the voltage on SYS (SC #3) falls to 0V and the voltage on TS/MR (SC #4) still periodically pulses to monitor button press.

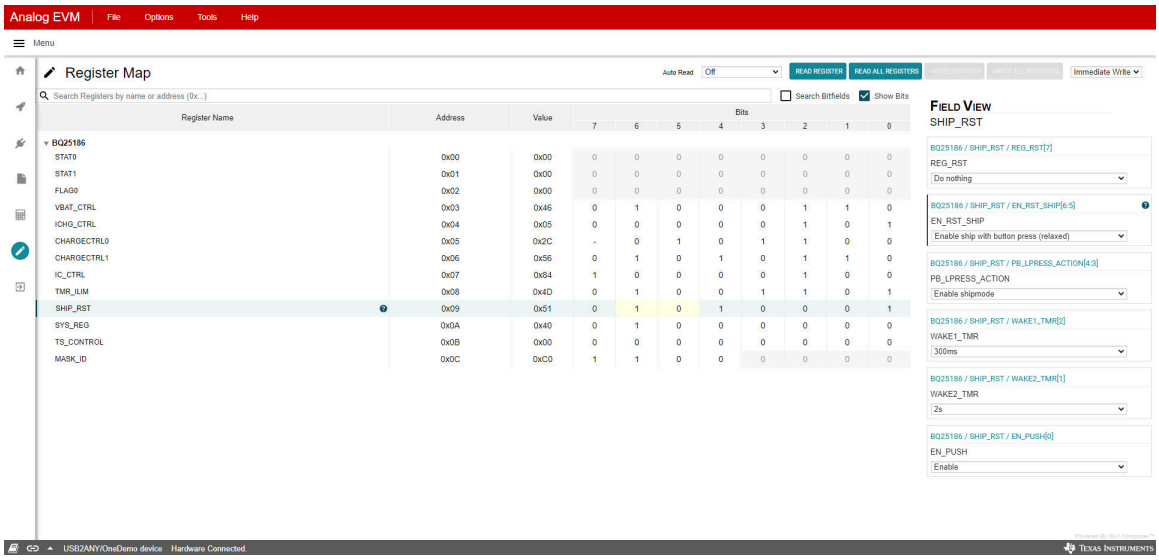

Figure 3-6. SHIP_RST Register: Enabling Ship Mode

Alternatively, Ship Mode can be entered through a long button press. Turn ON power supply #2. With VSYS active (not in Ship Mode or Shutdown Mode), make sure that the PB_LPRESS_ACTION bits are set to 2b10: Enable shipmode. After holding the button SW1 for longer than MR_LPRESS (default: 2b01 (10s), the voltage on SYS (SC #3) falls to 0V.

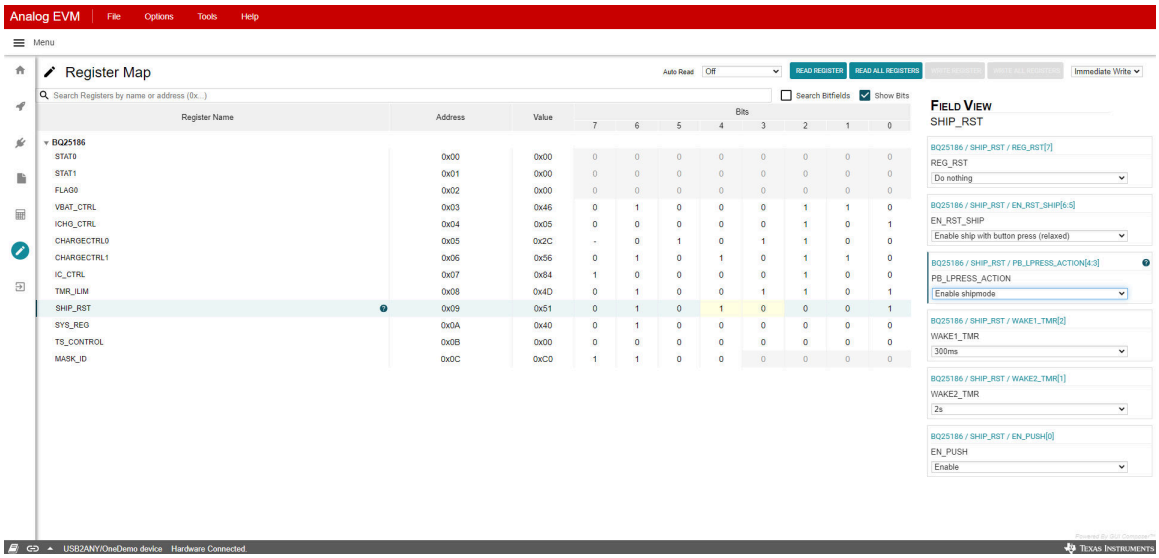

Figure 3-7. SHIP_RST Register: Long Press Action to Enable Ship Mode

To exit Ship Mode, hold the TS/MR button SW1 until VSYS enables. Turning on VIN at 5V also exits Ship Mode.

3.1.4 Shutdown Mode

To enter the Shutdown Mode state, connect the equipment as follows:

- Power Supply PS #1: VIN of the BQ25186EVM at 0V or disconnected
- Power Supply PS #2: VBAT of the BQ25186EVM at 3.7V
- Scope Channel SC #1: VIN at TP5
- Scope Channel SC #2: VBAT at TP8
- Scope Channel SC #3: VSYS at TP6
- Scope Channel SC #4: TS/MR at TP11

Turn ON power supply #2. Enter Shutdown Mode by setting the EN_RST_SHIP bits in the SHIP_RST register (0x09) to 2b01. Users are in Shutdown Mode when the voltage on the SYS pin (SC #2) falls to 0V and the voltage on the TS/MR pin falls to 0V.

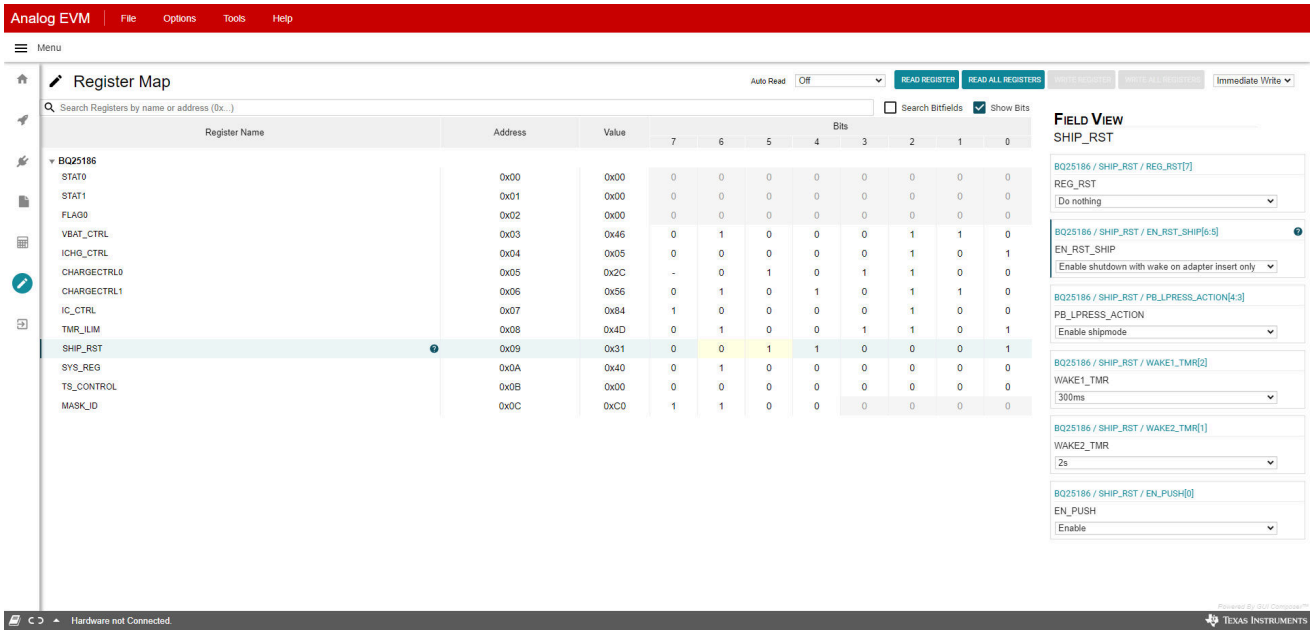

Figure 3-8. SHIP_RST Register: Enabling Shutdown Mode

Alternatively, Ship Mode can be entered through a long button press. Turn ON power supply #2. With VSYS active (not in Ship Mode or Shutdown Mode), make sure that the PB_LPRESS_ACTION bits are set to 2b11: Enable Shutdown Mode. After holding the button SW1 for longer than MR_LPRESS (default: 2b01 (10s), the voltage on SYS (SC #3) falls to 0V.

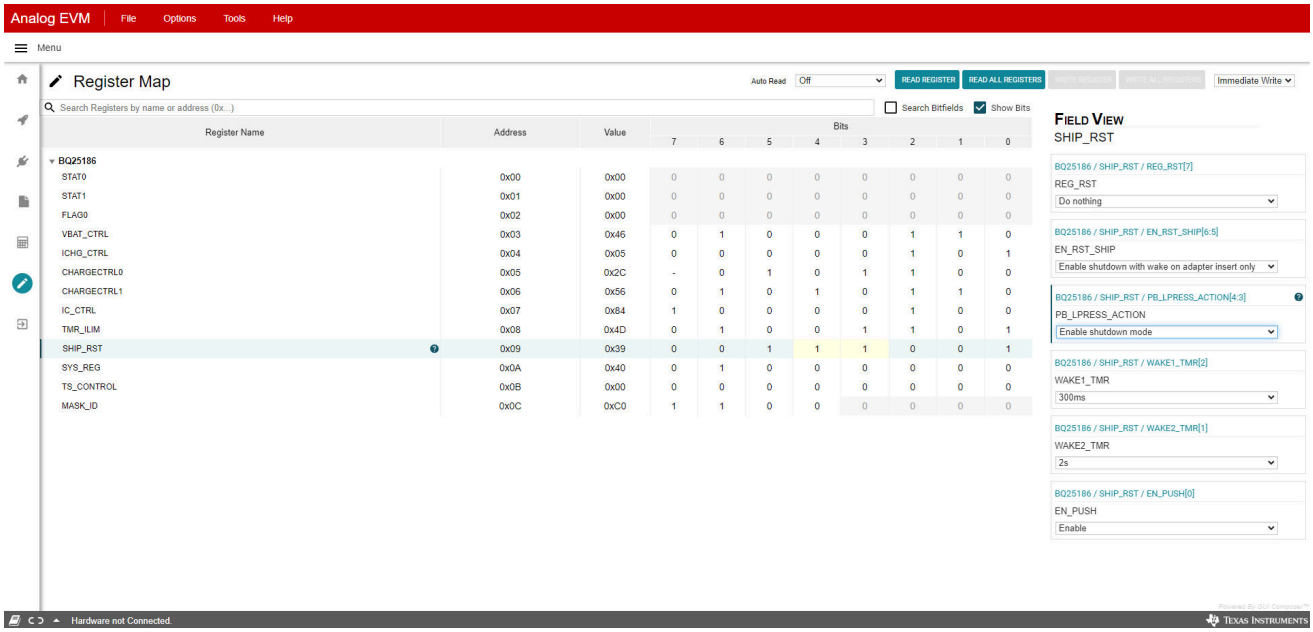

Figure 3-9. SHIP_RST Register: Long Press Action to Enable Shutdown Mode

To exit Ship Mode, turn on VIN at 5V. Exiting Shutdown Mode enables the VSYS output.

4 Hardware Design Files

4.1 Schematics

Figure 4-1 through Figure 4-3 illustrate the EVM schematics.

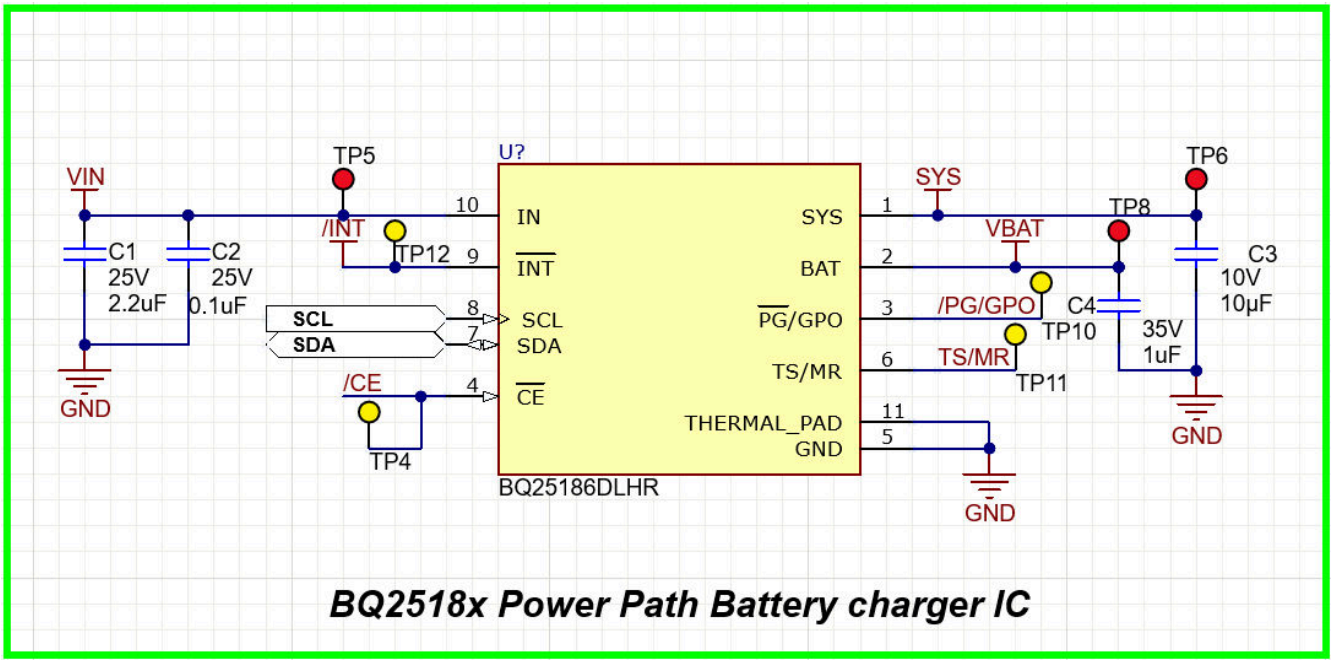

Figure 4-1. BQ25186EVM Schematic

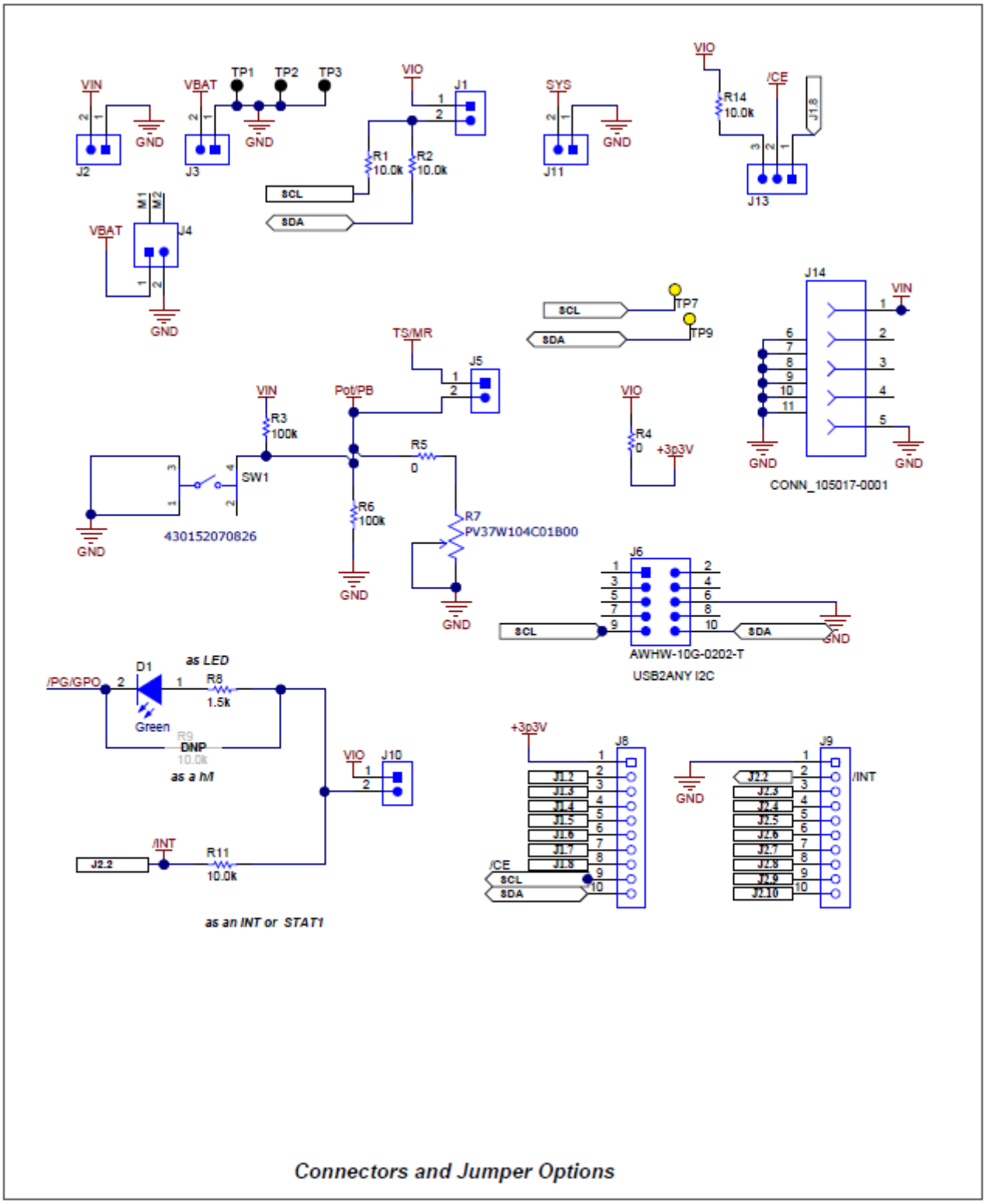

Figure 4-2. BQ25186EVM Jumper Connectors

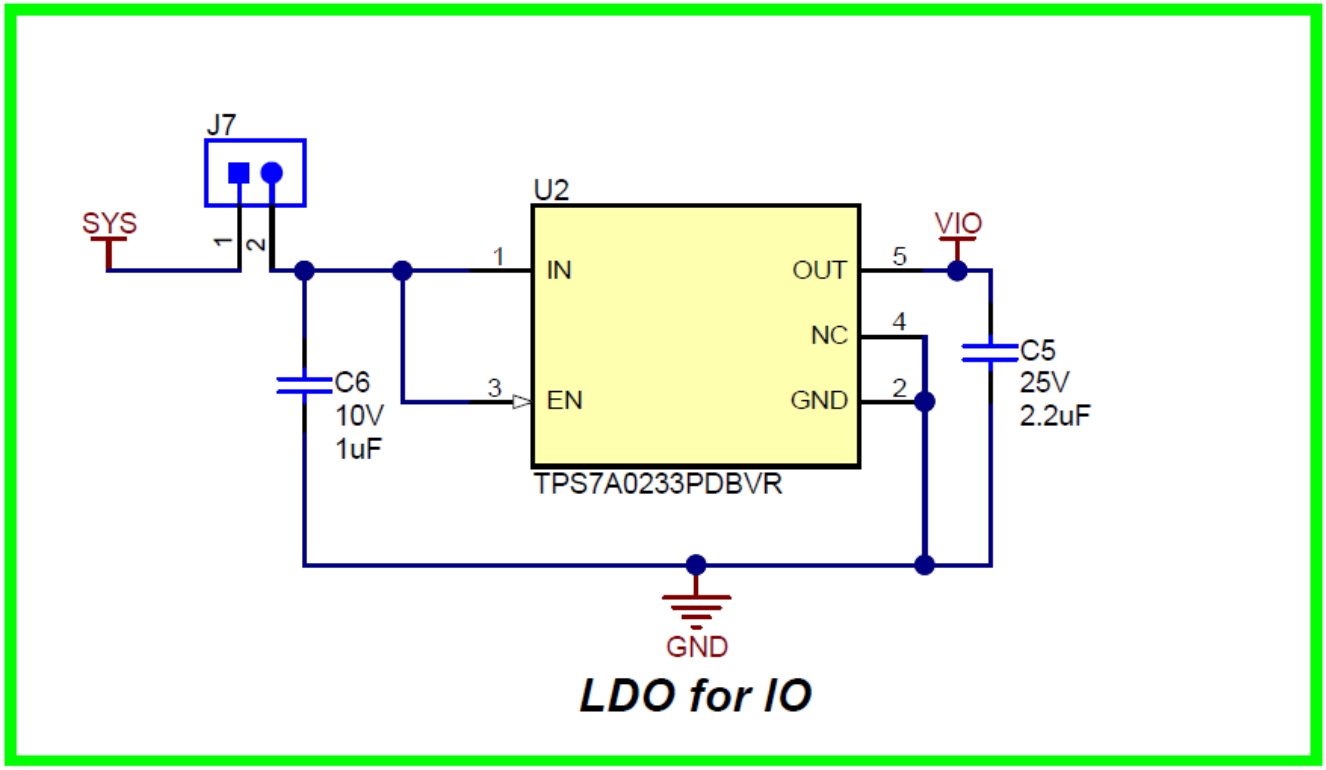

Figure 4-3. LDO for Other Peripherals

4.2 PCB Layout

Figure 4-4 through Figure 4-9 show the EVM PCB layout images.

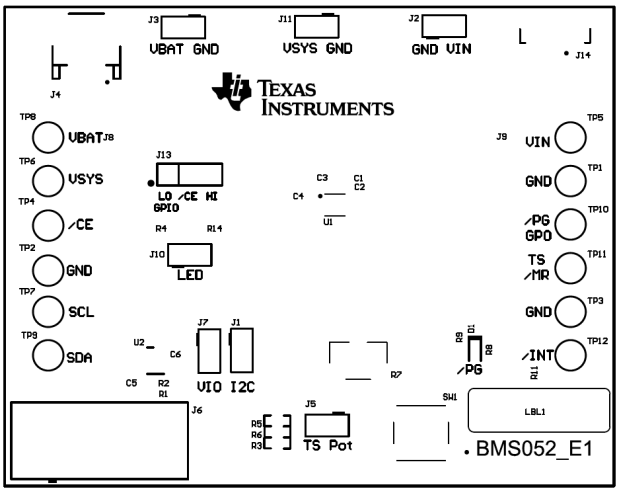

Figure 4-4. Top Overlay

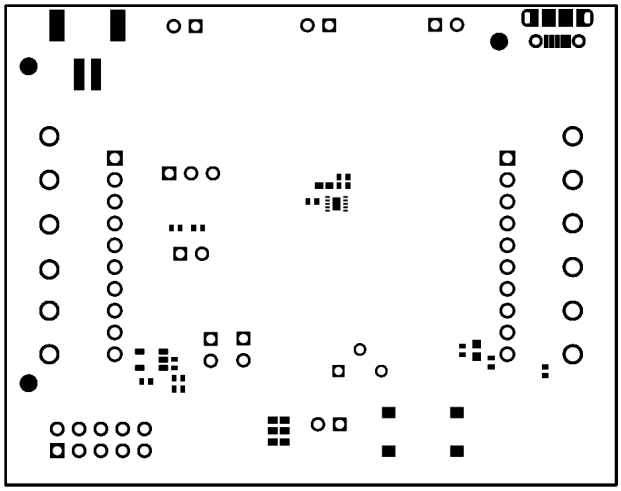

Figure 4-5. Top Solder

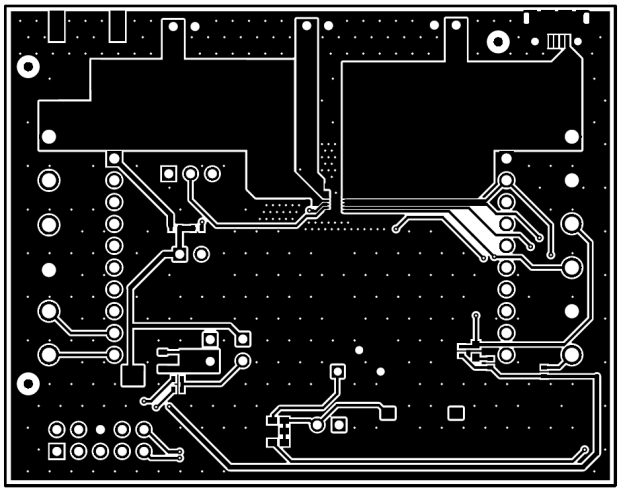

Figure 4-6. Top Layer

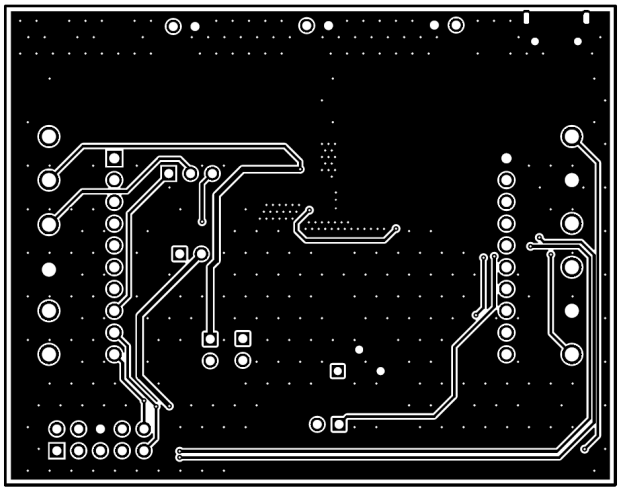

Figure 4-7. Bottom Layer

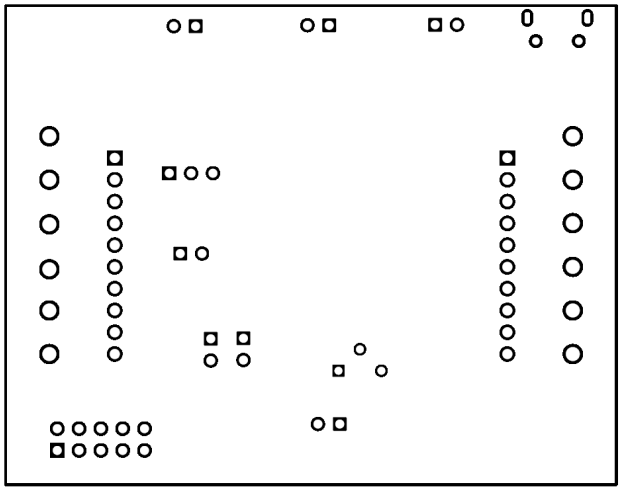

Figure 4-8. Bottom Solder

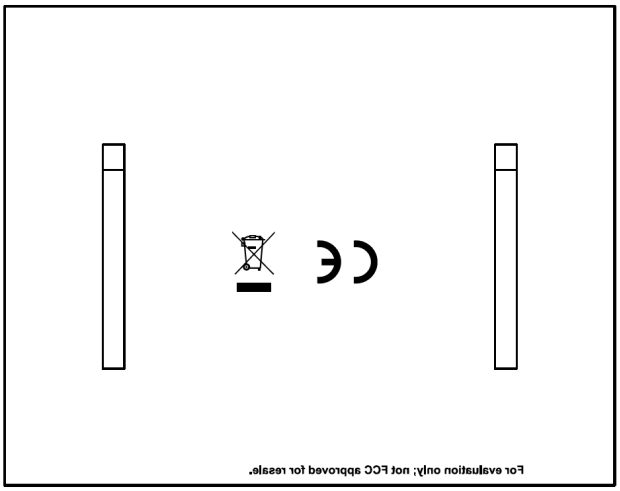

Figure 4-9. Bottom Overlay

4.3 Bill of Materials

Table 4-1 lists the bill of materials for BQ25186EVM.

Table 4-1. Bill of Materials

Designator	Quantity	Value	Description	Package Reference	Part Number	Manufacturer
C1, C5	2	2.2uF	CAP, CERM, 2.2uF, 25V, +/- 10%, X5R, 0402	0402	GRM155R61E225KE11D	MuRata
C2	1	0.1uF	CAP, CERM, 0.1uF, 25V, +/- 10%, X5R, 0402	0402	GRM155R61E104KA87D	MuRata
C3	1	10uF	CAP, CERM, 10µF, 10V,+/- 20%, X5R, 0402	0402	CL05A106MP8NUB8	Samsung Electro-Mechanics
C4	1	1uF	CAP, CERM, 1uF, 35V, +/- 10%, JB, 0402	0402	C1005JB1V105K050BC	TDK
C6	1	1uF	CAP, CERM, 1uF, 10V, +/- 10%, X5R, 0402	0402	GRM155R61A105KE15D	MuRata
D1	1	Green	LED, Green, SMD	1.6x0.8x0.8mm	LTST-C190GKT	Lite-On
J1, J2, J3, J5, J7, J10, J11	7		Header, 100mil, 2x1, Tin, TH	Header, 2 PIN, 100mil, Tin	PEC02SAAN	Sullins Connector Solutions
J4	1		Header (shrouded), 2mm, 2x1, R/A, SMT	Header, 2x1, 2mm, R/A	S2B-PH-SM4-TB(LF)(SN)	JST Manufacturing
J6	1		Header(Shrouded), 2.54mm, 5x2, Gold, TH	Header, 2.54mm, 5x2, TH	AWHW-10G-0202-T	Assman WSW
J8, J9	2		Connector, Receptacle, 100mil, 10x1, Gold plated, TH	10x1 Receptacle	SSW-110-23-F-S	Samtec
J13	1		Header, 100mil, 3x1, Tin, TH	Header, 3 PIN, 100mil, Tin	PEC03SAAN	Sullins Connector Solutions
J14	1		Connector, Receptacle, Micro-USB Type B, R/A, Bottom Mount SMT	Micro USB receptacle	105017-0001	Molex
LBL1	1		Thermal Transfer Printable Labels, 0.650" W x 0.200" H - 10,000 per roll	PCB Label 0.650 x 0.200 inch	THT-14-423-10	Brady
R1, R2, R11, R14	4	10.0k	RES, 10.0 k, 1%, 0.063 W, 0402	0402	RC0402FR-0710KL	Yageo America
R6	1	100k	RES, 100 k, 1%, 0.0625 W, AEC-Q200 Grade 0, 0402	0402	AC0402FR-07100KL	Yageo America
R4, R5	2	0	RES, 0, 5%, 0.1 W, AEC-Q200 Grade 0, 0402	0402	ERJ-2GE0R00X	Panasonic
R7	1	100kΩ	12-Turn Through Hole Trimmer Resistor with Pin Terminations, 10% 1/4W 150ppm/C	PTH_POT_6MM4_4MM0	PV37W104C01B00	Murata
R8	1	1.5k	RES, 1.5 k, 5%, 0.063 W, AEC-Q200 Grade 0, 0402	0402	CRCW04021K50JNED	Vishay-Dale
SW1	1		Tactile Switch SPST-NO Top Actuated Surface Mount	SMT_TACT	430152070826	Wurth Electronics

Table 4-1. Bill of Materials (continued)

Designator	Quantity	Value	Description	Package Reference	Part Number	Manufacturer
TP1, TP2, TP3	3		Test Point, Multipurpose, Black, TH	Black Multipurpose Test point	5011	Keystone
TP4, TP7, TP9, TP10, TP11, TP12	6		Test Point, Multipurpose, Yellow, TH	Yellow Multipurpose Test point	5014	Keystone
TP5, TP6, TP8	3		Test Point, Multipurpose, Red, TH	Red Multipurpose Test point	5010	Keystone
U1	1		Power Path Linear Battery Charger with ShipMode in ultra small package	WSON10	BQ25186DLHT	Texas Instruments
U2	1		1uA IQ, 200mA, Ultralow IQ Low-Dropout Regulator, DBV0005A (SOT-23-5)	DBV0005A	TPS7A0233PDBVR	Texas Instruments
FID1, FID2, FID3	0		Fiducial mark. There is nothing to buy or mount.	N/A	N/A	N/A
R9	0	10.0k	RES, 10.0 k, 1%, 0.063 W, 0402	0402	RC0402FR-0710KL	Yageo America

5 Additional Information

5.1 Trademarks

All trademarks are the property of their respective owners.