DISCLAIMER
* HD3SS3411
****
* (C) Copyright 2013 Texas Instruments Incorporated. All rights reserved.
****
** This model is designed as an aid for customers of Texas Instruments.
** TI and its licensors and suppliers make no warranties, either expressed
** or implied, with respect to this model, including the warranties of
** merchantability or fitness for a particular purpose. The model is
** provided solely on an "as is" basis. The entire risk as to its quality
** and performance is with the customer.
****
1) THE ACCURACY OF THE HSPICE MODELS PROVIDED TO YOUR COMPANY; 2) THE PROPER FUNCTIONING OF THESE HSPICE MODELS IN YOUR DESIGN OR FOR ANY RESULTING APPLICATIONS; OR 3) INFRINGEMENT OF PATENTS, COPYRIGHTS OR INTELLECTUAL PROPERTY RIGHTS RESULTING FROM YOUR USE OF THESE HSPICE MODELS.

TI PROVIDES HSPICE MODELS AS A SERVICE TO OUR CUSTOMERS. YOU AND YOUR COMPANY SHALL NOT DISTRIBUTE, SELL OR GIVE THESE MODELS TO ANYONE ELSE WITHOUT PRIOR WRITTEN PERMISSION FROM TI.

TI RESERVES THE RIGHT TO MAKE CHANGES TO OUR PRODUCTS OR TO DISCONTINUE ANY SEMICONDUCTOR PRODUCT OR SERVICE WITHOUT NOTICE, AND ADVISES OUR CUSTOMERS TO OBTAIN THE LATEST VERSION OF RELEVANT INFORMATION TO VERIFY, BEFORE PLACING ORDERS, THAT THE INFORMATION BEING RELIED ON IS CURRENT.

PLEASE BE AWARE THAT YOUR RECEIPT AND USE OF THE HSPICE INFORMATION PROVIDED SHALL SERVE AS ACCEPTANCE OF THESE TERMS AND CONDITIONS. IF YOU DO NOT ACCEPT THESE TERMS, YOU SHOULD RETURN OR DESTROY THE HSPICE MODELS AND ANY OTHER ACCOMPANYING INFORMATION IMMEDIATELY.

File Description

File ‘HD3SS3411_tb.sp’ which is the test bench and this invokes other two files: ‘process_nominal_enc.sp’ and ‘HD3SS3411_FET_subckt_enc.sp’.

Instructions

1) Unzip the file ‘HD3SS3411_HSPICE_AIO_27SEP2013.zip’ on Windows and transfer the files to UNIX or Windows.

2a) On a terminal linux window, run the command line

%hspice –i HD3SS3411_tb.sp –o HD3SS3411_tb

2b) Or open your simulator HSPICE_A-2008.03-SP1 on Windows and on the file menu, open and run file ‘HD3SS3411_tb.sp’.

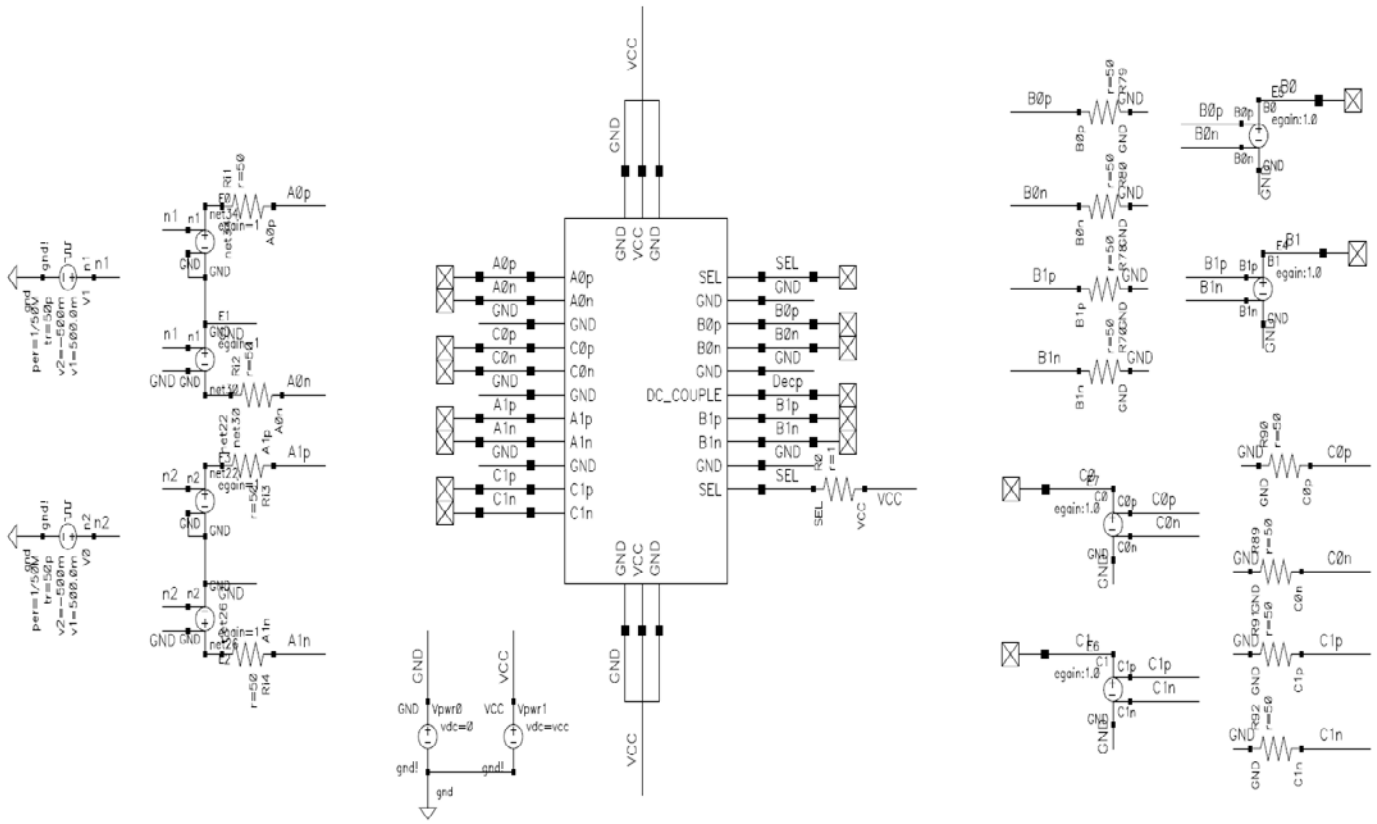

VCC
GND
A0p
A0n
A1p
A1n
SEL
B0p
B0n
B1p
B1n
C0p
C0n
C1p
C1n
DC_COUPLE
Decp
Vpwr0
vdc=0
Vpwr1
vdc=vcc
gnd!
gnd
n1
n2
V1
V0
per=1/50M
tr=50p
v2=-500m
v1=500.0m

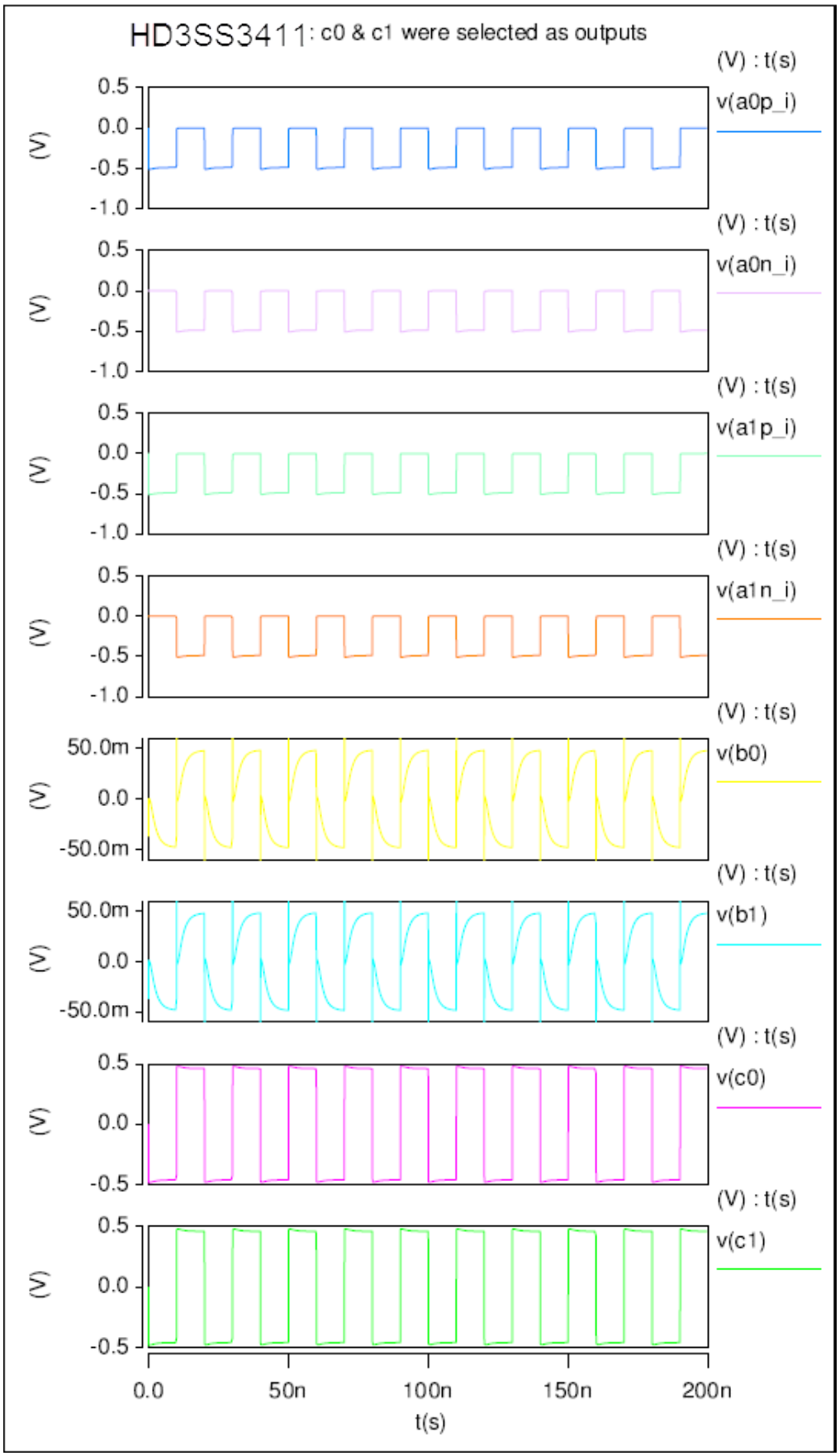
HD3SS3411: c0 & c1 were selected as outputs
(V) : t(s)
v(a0p_i)
v(a0n_i)
v(a1p_i)
v(a1n_i)
v(b0)
v(b1)
v(c0)
v(c1)
(V)
0.5
0.0
-0.5
-1.0
50.0m
-50.0m
0.0
50n
100n
150n
200n
t(s)